SERVICE & OPERATION MANUAL

CONTINUOUS DUTY

P25-02L1-C1
P25-05L1-C1
P25- 2L1-C1
P25-15L1-C1

Milcom International Inc.
10891 Capital Avenue
Garden Grove, Calif. 92643-4953

Tel: (714) 554-1710

Fax: (714) 554-3090

TABLE OF CONTENTS

SECTION		PAGE
I		
	GENERAL INFORMATION	1
1.1	General Description	1
1.2	Typical Block Diagram	1
II	**INSTALLATION**	
2.1	General	6
2.2	Initial Inspection	6
2.3	Relay Rack Mounting	6
2.4	RF Connections	7
2.5	DC Power Connections	7
2.6	Return for Service Procedures	7
2.7	Repacking for Shipment	8
2.8	RF Power Input Table	
III	**PRINCIPALS OF OPERATION**	
3.1	Overall Technical Description	14
3.2	900 MHz 2-Way Power Splitter and Power Combiner	17
3.3	900 MHz, 4-Way Power Splitter Combiner	19
3.4	DC Distribution Board	21
3.5	45 Watt, 900 MHz, Common Base Amplifier	23
3.6	15 Watt Output, 16 dB Gain Hybrid Power Amplifier	25
3.7	7-Pole Low Pass Filter	27
3.8	Output Power Control Module	29

SECTION

IV	**MAINTENANCE**	
4.1	Amplifier Service Procedures	31
4.2	Amplifier Adjustment Instructions	35
4.3	Trouble shooting Flow Chart	4-5
V	**REPLACEMENT PARTS LIST**	
5.1	Introduction	39
5.2	Correspondence and Ordering of Spare Parts	39
5.3	Parts Supplied (BOM's)	39
5.3-0	Major Amplifier Components	40

LIST OF ILLUSTRATIONS

FIGURE	DESCRIPTION	PAGE
1.1	100% Duty Cycle Amplifier for Repeater and Trunk Applications	2
1.2	50% Duty Cycle Amplifiers for Repeater Applications	3
1.3	Mobile and Base Station Amplifiers for FM Applications	4
1.4	Linear Mobile and Base Station Amplifiers for AM and SSB applications	5
2.1	Amplifier Rear View	9
2.2	Amplifier Front View	10
2.3	DC Interconnections	11
2.4	DC Interconnections 15 Watt Input.	12
2.5	DC Power Distribution and Fuse Data	13
3.0	P15-15L1-C1 Block Diagram	15
3.1	Simplified Block Diagram P15-15L1-C1/2	16
3.2	2-Way Power Splitter and Power Combiner	18
3.3	4 Way Power Splitter and Power Combiner	20
3.4	DC Distribution Board	22
3.5	45 Watt RF Power Amplifier Module	24
3.6	15 Watt 16dB gain Hybrid Amplifier	26
3.7	7 Pole Low Pass Filter 960 MHz cutoff	28
3.8	Output Power Control Module	30

FIGURE	DESCRIPTION	PAGE
4.1	Module and Adjustments Location P15-15L1-C1/2	32
4.2	Power Meter Adjustment Locations	33
4.3	Recommended Test Set-Up	34
4.4-1	Trouble Shooting Flow Chart	36
4.4-2	Trouble Shooting Flow Chart	37
4.4-3	Trouble Shooting Flow Chart	38
5.1	15 Watt Output, 16 dB Gain Hybrid Power Amplifier Part No. 540-071	42
5.3	45 Watt 920-960 MHz RF Power Amplifier Module Part No. 540-061	44
5.4	900 MHz, 2-Way Power Splitter Part No. 540-155	46
5.5	900 MHz, 2-Way Power Combiner Part No. 540-155	48
5.6	900 MHz, 4-Way Power Splitter Part NO. 540-059	50
5.7	900 MHz, 4-Way Power Combiner Part No. 540-087C	52
5.3-8	DC Power Distribution Part No. 540-083A	54
5.8	Power Meter Control Board Part No. 540-162	56
5.10	Power Output Control Board Part No. 540-174	58
5-10	7 Pole Low Pass Filter 960 MHz Cut Off Frequency Part No. 540-066	54

LIST OF BOM'S

BOM	DESCRIPTION	PAGE
5.3-1	15 Watt Output, 16 dB Gain Hybrid Power Amplifier Part No. 540-071	41
5.3-2	45 Watt, 900 MHz 14 VDC Common Base Amplifier Part No. 540-061	43
5.3-3	900 MHz, 2-Way Power Splitter Part No. 540-155	45
5.3-4	900 MHz, 2-Way Power Combiner Part No. 540-155	47
5.3-5	900 MHz, 4-Way Power Splitter Part No. 540-059	49
5.3-6	900 MHz 4-Way Power Combiner Part No. 540-087C	51
5.3-7	7 Pole Low Pass Filter, 960 MHz Cut off, Part No. 540-066	53
5.3-8	DC Distribution Board	55
5.3-9	Power Meter Control Board	57
5.3-10	Power Output Control Board	59

SECTION I

General Information

1.1 General Description

Milcom RF Power Amplifiers are designed to be used with communications equipment operating in the HF Band of 2 to 30 MHz. The VHF band of 30 to 300 MHz and the UHF band of 300 to 3000 MHz. Models are available for FM, AM and SSB operation.

Operation with a transceiver is simplified through the use of an internal RF actuated amplifier bypass circuit. During receive this circuit routes the signal around the RF power amplifier. During transmit this circuit automatically switches the RF power amplifier in line. RF power amplifiers for repeater operation have no need of, and therefore are not supplied with this bypass circuit.

Amplifiers intended for AM and SSB applications include an RF actuated bias circuit. This circuit automatically applies bias only during the power amplifier transmit periods. A leveling circuit is also available to maintain transmit periods. A leveling circuit is also available to maintain power output over wide variations of frequency and input power.

The amplifiers manufactured by Milcom are proven designs utilizing a combination of advanced technologies such as ferrite transformers, microstrip matching and quadrature combiners to provide broad band performance and high reliability.

1.2 TYPICAL BLOCK DIAGRAMS

Figures 1.1 through 1.4 show typical block diagrams of Milcom designed amplifiers. These diagrams are presented as an aid to understanding Milcom's design approach, and not necessarily to assist in trouble shooting amplifier malfunctions.

NOTES

1 THIS MODULE NOT INCLUDED IN ALL AMPLIFIERS
2 THIS MODULE NOT INCLUDED IN SINGLE STAGE AMPLIFIERS
3 THIS MODULE INCLUDED ONLY IN AMPLIFIERS WITH ALARM OPTION

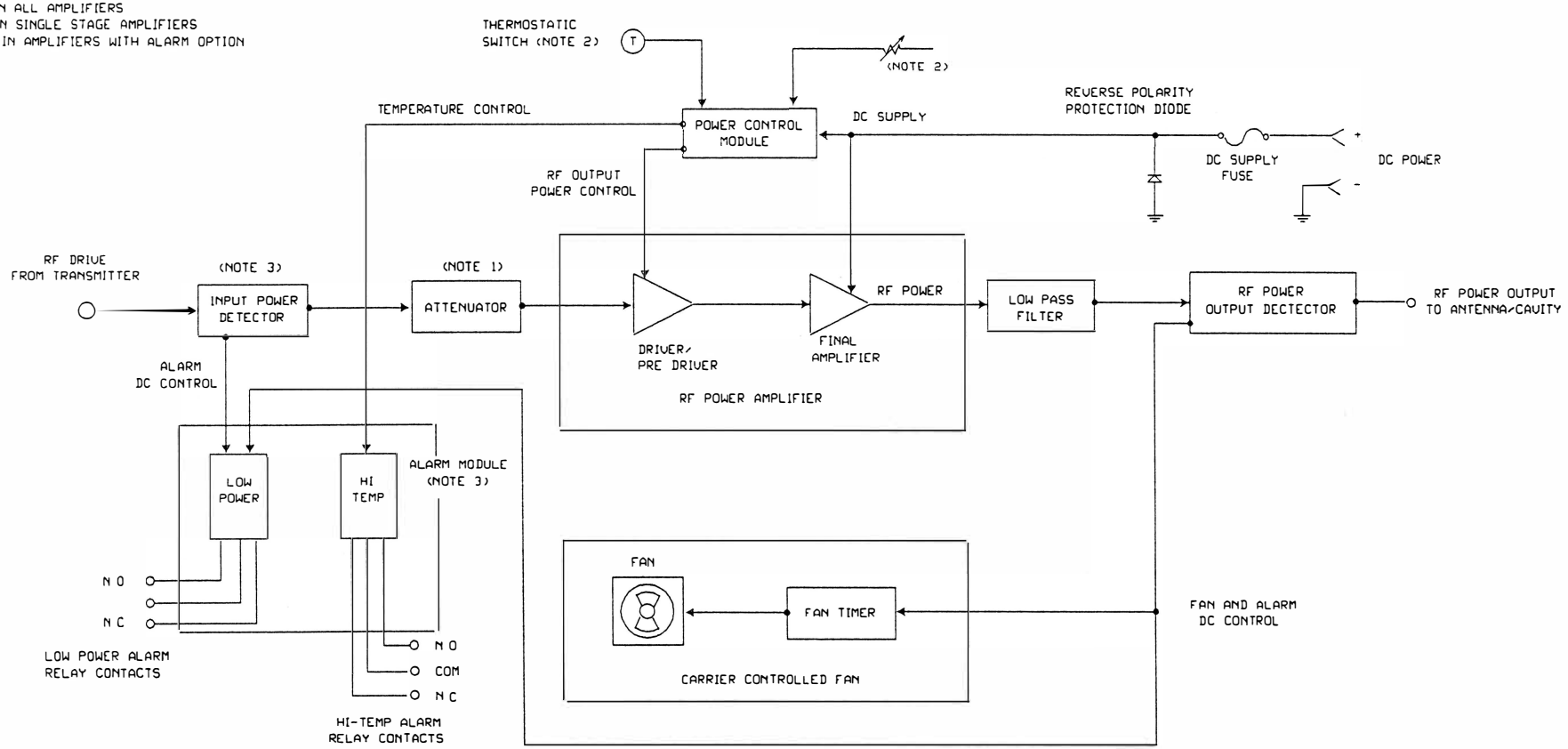

BLOCK DIAGRAM
100% DUTY CYCLE AMPLIFIERS
FOR REPEATER AND TRUNK APPLICATIONS

Fig. 1.1

MILCOM INTERNATIONAL Milcom 10891 CAPITAL AVE GARDEN GROVE, CA 92640	
SCHEMATIC DIAGRAM	
DESCRIPTION	100% DUTY CYCLE AMPLIFIER BLOCK DIAGRAM
USED ON	
MODULE ASSEMBLY NO	
CIRCUIT DESCRIPTION NO	
DRAWN BY LINH LE	DATE 01-07-93

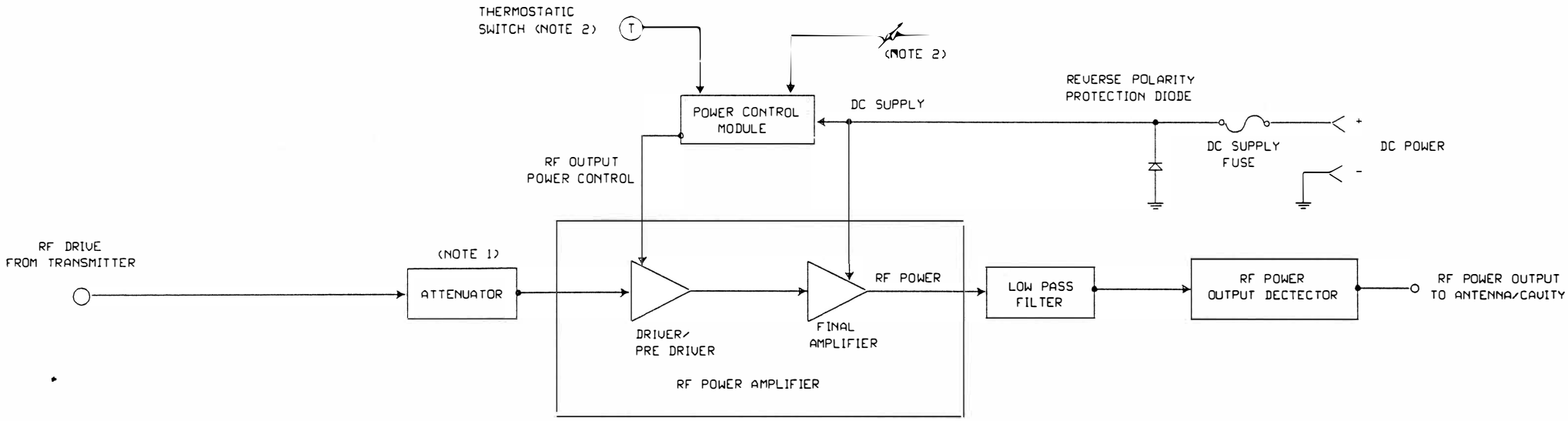

BLOCK DIAGRAM
50% DUTY CYCLE AMPLIFIERS
FOR REPEATER AND TRUNK APPLICATIONS

NOTES

1 THIS MODULE NOT INCLUDED IN ALL AMPLIFIERS
2 THIS MODULE NOT INCLUDED IN SINGLE STAGE AMPLIFIERS

MILCOM INTERNATIONAL Milcom 10891 CAPITAL AVE GARDEN GROVE, CA 92640			
SCHEMATIC DIAGRAM			
DESCRIPTION	50% DUTY CYCLE AMPLIFIER BLOCK DIAGRAM		
USED ON			
MODULE ASSEMBLY NO			
CIRCUIT DESCRIPTION NO			
DRAWN BY	LINH LE	DATE	01-07-93
PCB PN		DWG	BLK50% DWG

Fig. 1.2

BLOCK DIAGRAM

MOBILE AND BASE STATION AMPLIFIERS FOR FM APPLICATIONS

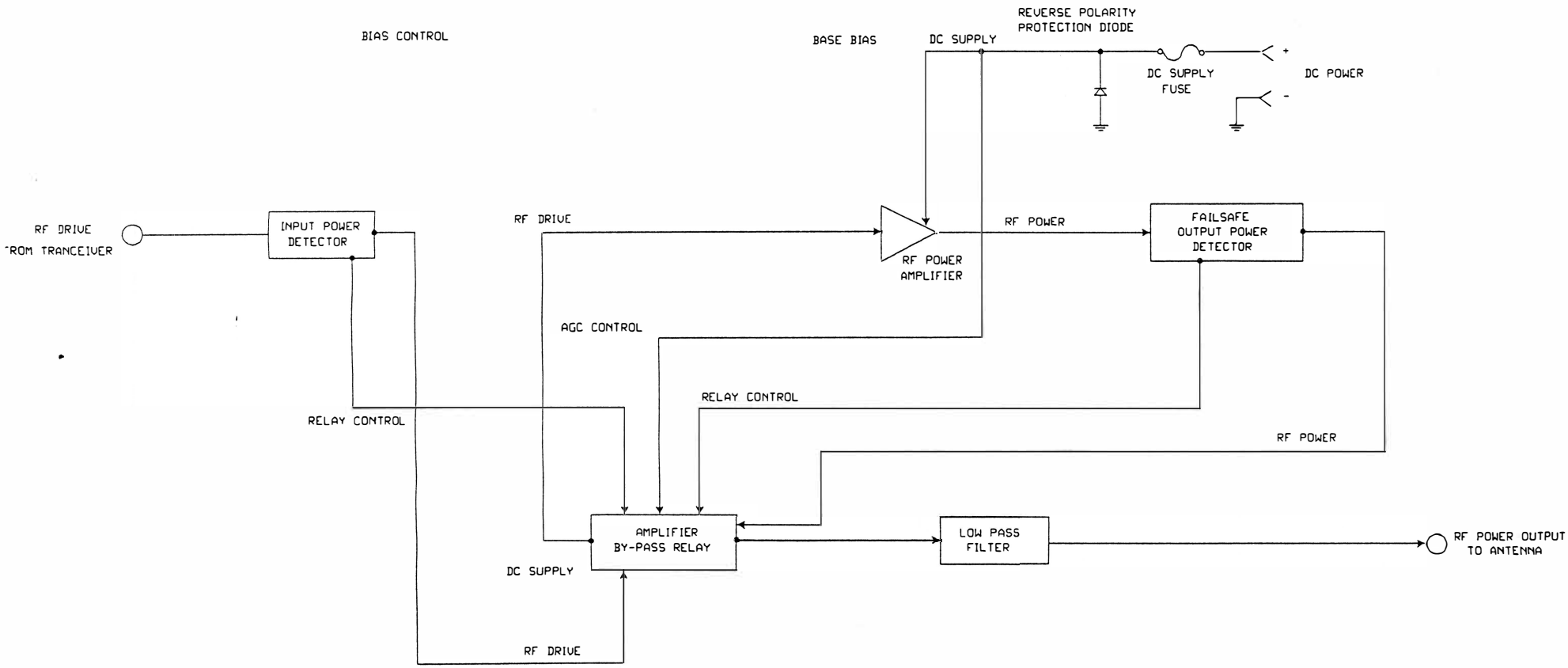

Fig. 1.3

MILCOM INTERNATIONAL Milcom 10891 CAPITAL AVE GARDEN GROVE, CA 92640	
SCHEMATIC DIAGRAM	
DESCRIPTION FM APPLICATIONS BLOCK DIAGRAM	
USED ON	
MODULE ASSEMBLY NO	
CIRCUIT DESCRIPTION NO	
DRAWN BY LINH LE	DATE 01-07-93
PCB PN	DWG BLKFM DWG

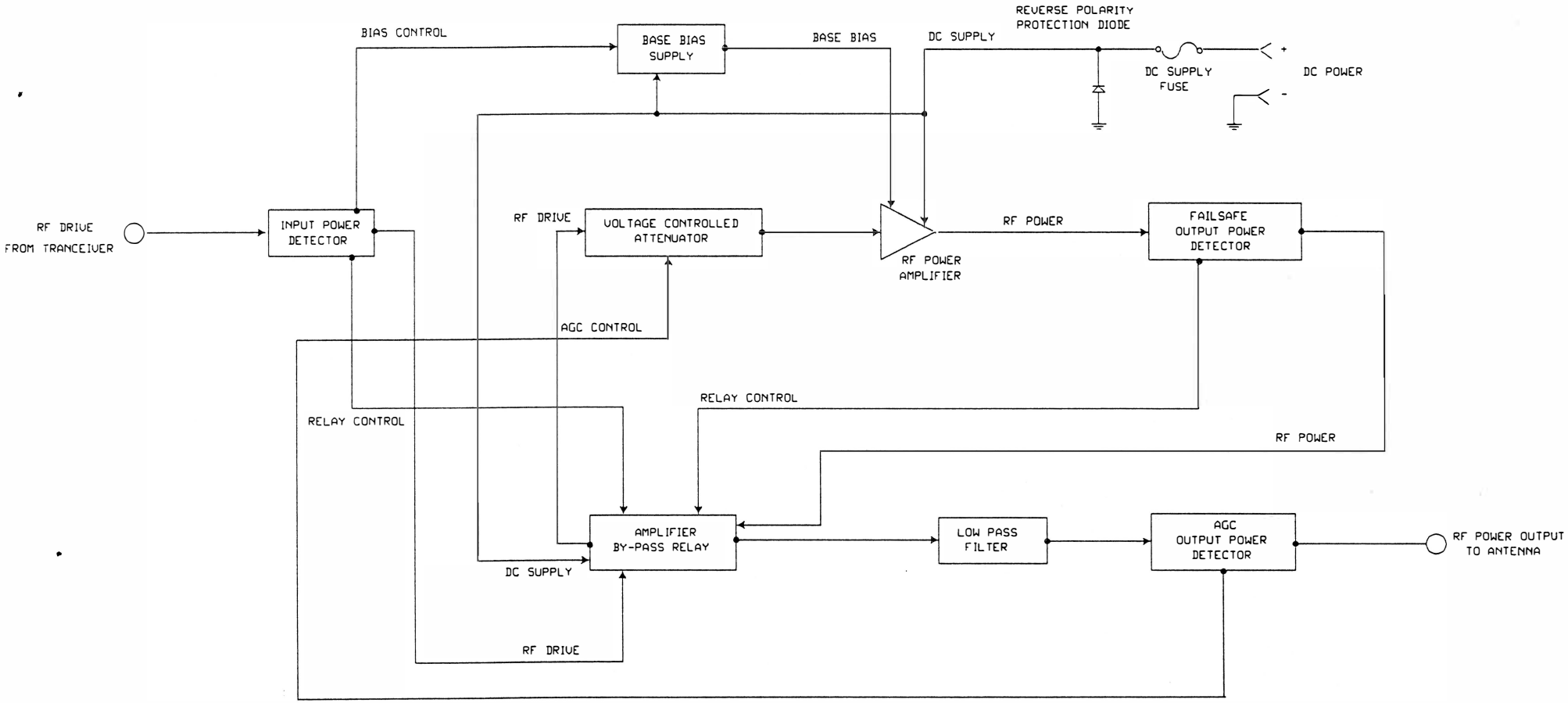

BLOCK DIAGRAM

LINEAR MOBILE AND BASE STATION
AMPLIFIERS FOR AM AND SSB APPLICATIONS

Fig. 1.4

MILCOM INTERNATIONAL Milcom 10891 CAPITAL AVE GARDEN GROVE, CA 92640	
SCHEMATIC DIAGRAM	
DESCRIPTION	AM AND SSB APPLICATIONS BLOCK DIAGRAM
USED ON	
MODULE ASSEMBLY NO	
CIRCUIT DESCRIPTION NO	
DRAWN BY LINH LE	DATE 01-07-93
PCB PN	DWG BLKAM DWG

SECTION II

Installation

2.1 General

Before shipment, all power amplifiers undergo four levels of test and inspection:

1. Individual module testing
2. Complete power amplifier assembly testing
3. Minimum 12-hour burn-in testing
4. Final test and alignment

The amplifier is then packed in a special shipping carton along with the following accessories:

1. DC Power cable
2. Test Data sheet

2.2 Initial Inspection

If damage to the shipping carton is evident, report the extent of damage to the carrier's agent. Save all packing materials until the amplifier is inspected mechanically and electrically.

2.3 Relay Rack Mounting

The amplifier is shipped ready to mount on a standard EIA 19" relay rack or equivalent enclosed cabinet. There must be enough space around the mounted amplifier to permit free flow of cooling air.

2.4 RF Connections

The RF input/output connectors are type N female located in the back of the amplifier. See figure 2.1, Amplifier Rear View, and Figure 2.2, Amplifier Front View.

Confirm that the exciter power output level is compatible with the amplifier power input requirements. Do not exceed the maximum drive level indicated in the amplifier specifications. Page 8 shows the power input range for the different power amplifier models.

Connect the exciter output cable to the Type N input connector on the power amplifier. Connect the output of the power amplifier to the antenna or combiner input.

2.5 DC Power Connections

Figure 2.3 through 2.5 show DC power interconnections and DC power distributions. If the amplifier is supplied with a Milcom recommended power supply, the required DC and AC connecting cables are included with the power supply.

2.6 Return for Service Procedures

A Return Material Authorization (RMA) number must be obtained prior to returning equipment to the Factory for service. Please contact our service department to obtain this number. Phone number (714) 554-1710 Ext. 20. Failure to obtain this RMA number will result in considerable delays in receiving repair service.

2.7 Repacking for Shipment

To insure safe shipment of the amplifier, it is recommended that the package designed for the amplifier be used. The original packaging material is reusable. If it's not available, contact Milcom's Customer Service Department for packing materials and information.

TABLE 2.8

Power Input range

930-940 MHz

MODEL DESCRIPTION	REQUIRED POWER IN	MAXIMUM POWER IN	SPECIFIED POWER OUTPUT
P25-02L1	50 milli Watts	100 mWatts	250 WATTS
P25-05L1	0.25 Watts	0.5 Watts	250 WATTS
P25- 2L1	1.5 Watts	2.0 Watts	250 WATTS
P25-15L1	10 Watts	17 WATTS	250 WATTS

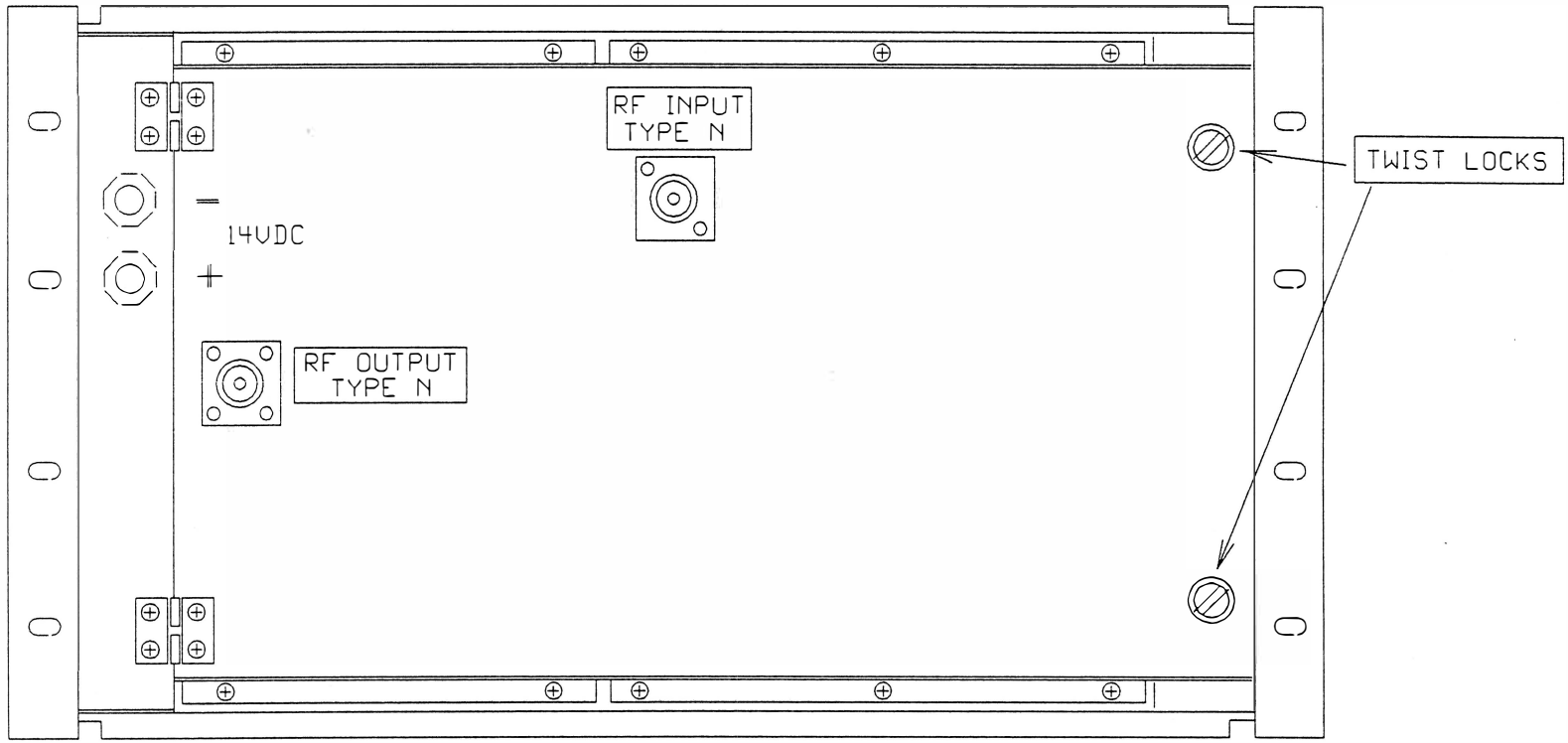

REAR VIEW

Fig. 2.1

250 WATT AMPLIFIER

MILCOM INTERNATIONAL 10891 CAPITAL AVE GARDEN GROVE, CA 92640	
SCHEMATIC DIAGRAM	
DESCRIPTION C8, HIGH POWER AMPLIFIER PACKAGE	
USED ON KW SERIES, C8 STAND PRODUCT	
MODULE ASSEMBLY NO	
CIRCUIT DESCRIPTION NO	
DRAWN BY LINH V LE	DATE 12-22-92
PCB PN	REV
TDS 950-119	REV

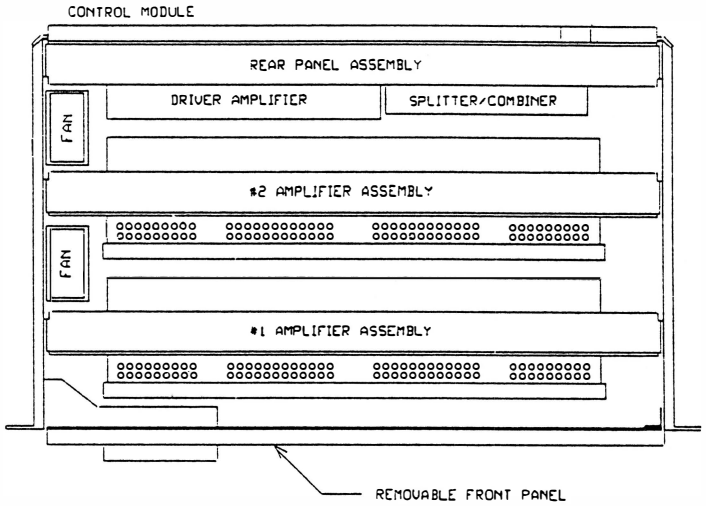

TOP VIEW

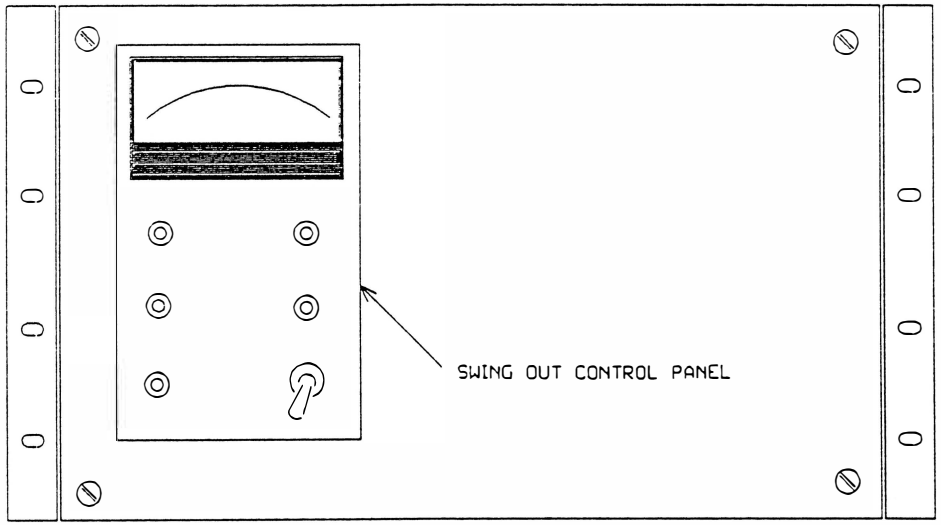

FRONT VIEW

Fig. 2.2

250 WATT AMPLIFIER

MILCOM INTERNATIONAL 10891 CAPITAL AVE GARDEN GROVE, CA 92640	
SCHEMATIC DIAGRAM	
DESCRIPTION C8, HIGH POWER AMPLIFIER PACKAGE	
USED ON KW SERIES, C8 STAND PRODUCT	
MODULE ASSEMBLY NO	
CIRCUIT DESCRIPTION NO	
DRAWN BY LINH V LE	DATE 12-22-92
PCB PN	REV
TDS 950-119	REV:

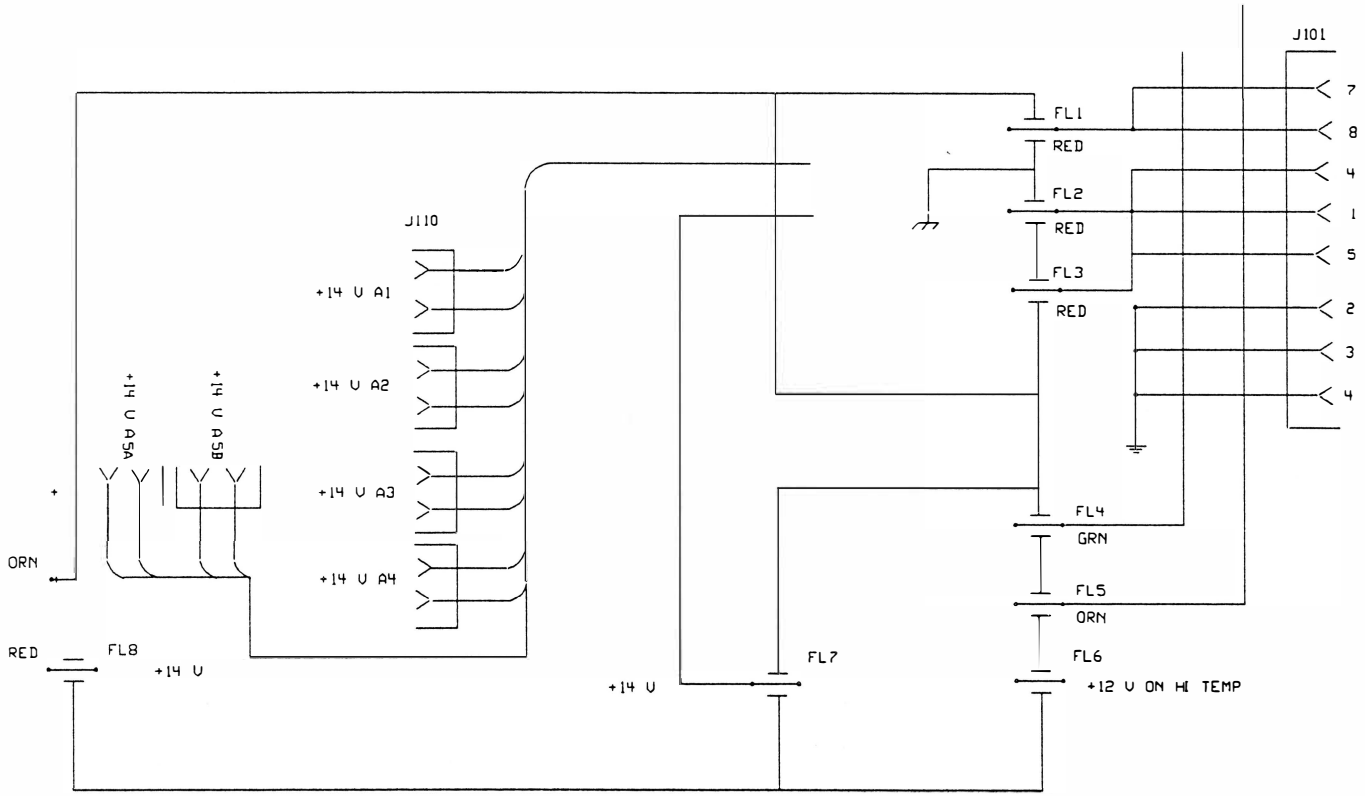

Fig. 2.3

MILCOM INTERNATIONAL
Milcom 10891 CAPITAL AVE GARDEN GROVE, CA 92640

PRODUCT	ASSEMBLY REFERENCE NO
P15-02L1	NONE
P15-05L1	
P15-2L1	
P15-15L1	
P25-05L1	
P25-2L1	

SCHEMATIC DIAGRAM

DESCRIPTION DC INTERCONNECTIONS 90 WATTS & 150 WATTS RF AMPLIFIERS 806 TO 890 MHz

MODULE ASSEMBLY NO NOT APPLICABLE

CIRCUIT DESCRIPTION NO N/A

DRAWN BY R. HEILMAN DATE 01-12-93

PCB PN N/A REV

TDS REV A

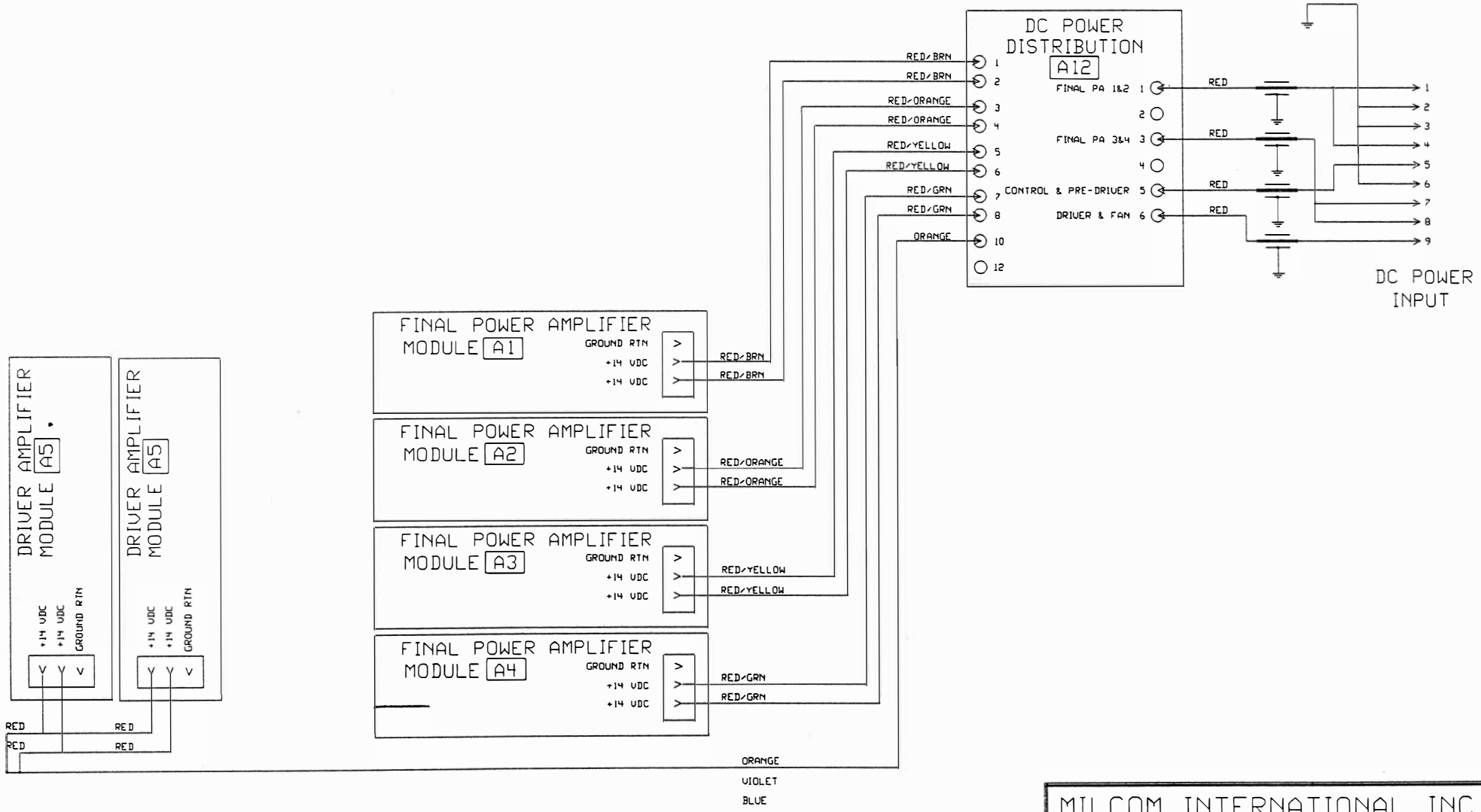

Fig. 2.4

MILCOM INTERNATIONAL INC 10891 CAPITAL AVE GARDEN GROVE CA 92643	
SCHEMATIC DC INTERCONNECTIONS	
USED ON 150 WATT 900 MHz AMPLIFIER	
CUSTOMER STANDARD PRODUCT	
DRAWN BY T LITTY	DATE 10-09-89 P18-KDC
DWG NO 950-135	REV A

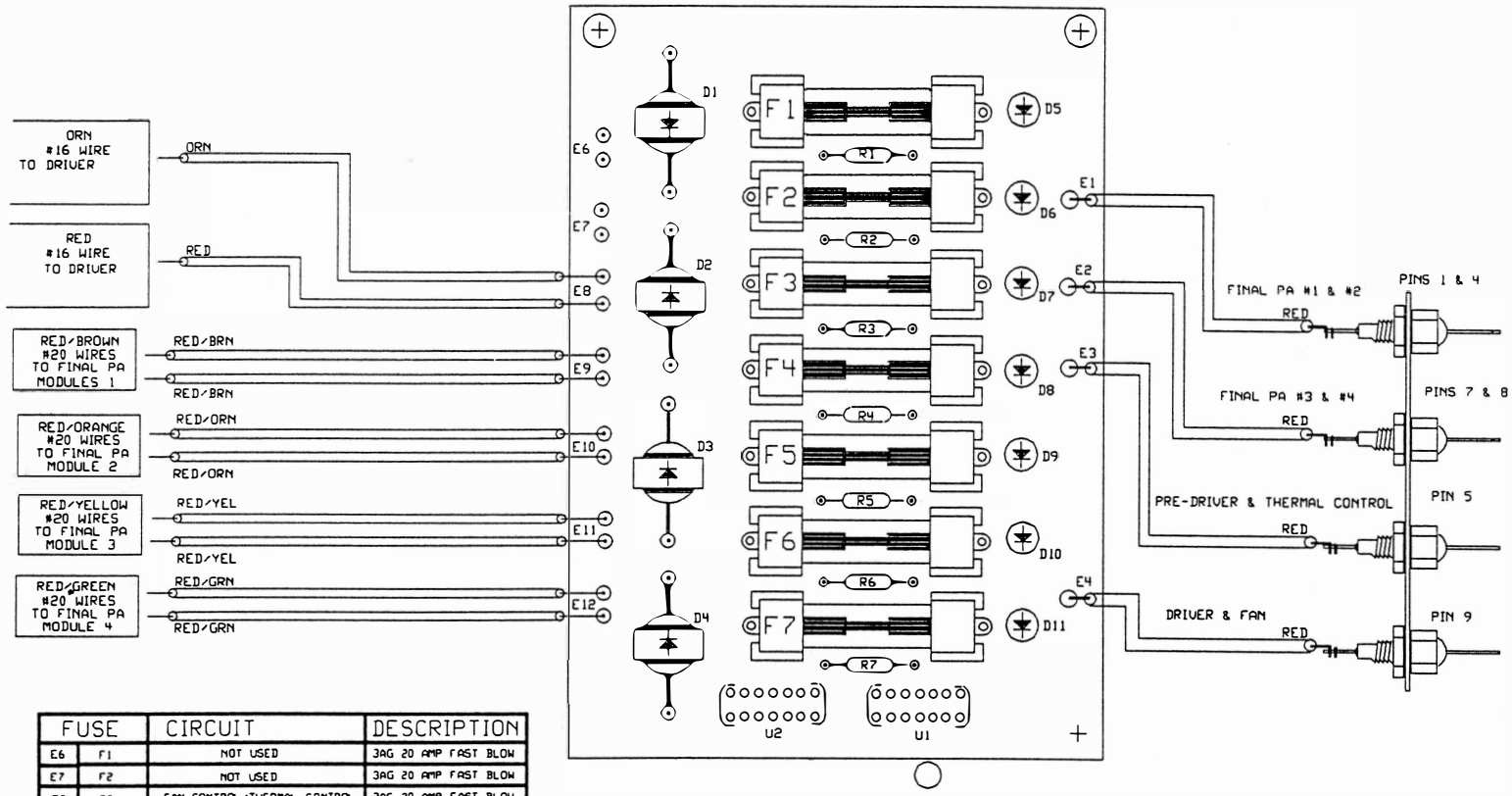

FUSE		CIRCUIT	DESCRIPTION
E6	F1	NOT USED	3AG 20 AMP FAST BLOW
E7	F2	NOT USED	3AG 20 AMP FAST BLOW
E8	F3	FAN CONTROL/THERMAL CONTROL	3AG 20 AMP FAST BLOW
E9	F4	FINAL PA #1	3AG 20 AMP FAST BLOW
E10	F5	FINAL PA #2	3AG 20 AMP FAST BLOW
E11	F6	FINAL PA #3	3AG 20 AMP FAST BLOW
E12	F7	FINAL PA #4	3AG 20 AMP FAST BLOW

DC POWER DISTRIBUTION AND FUSE BOARD
PICTORIAL & CONNECTIONS

MILCOM INTERNATIONAL Milcom 10891 CAPITAL AVE GARDEN GROVE, CA 92640	
SCHEMATIC DIAGRAM	
DESCRIPTION OUTLINE DRAWING - DC DISTRIBUTION BOARD	
USED ON 150 WATT, 900 MHz AMPLIFIER	
CIRCUIT DESCRIPTION NO N/A	
DRAWN BY L. LE	DATE 01-13-93
PCB PN 240-083	REV E
TDS 950-129	REV: A

Fig. 2.5

SECTION III

PRINCIPAL OF OPERATION

3.1 Overall Technical Description

This amplifier is intended for trunking and conventional repeater applications requiring high duty cycles. It consists of three stages of amplification followed by a 7 pole low pass filter and associated control circuitry. RF power from the final amplifier stages is combined through the 2 way combiner. Figure 3.0 shows a Functional Block diagram of the 150 Watt amplifier half Model P15-15L1. Figure 3.1 shows a simplified block diagram of the amplifier Model No. P25-2L1-C8.

The pre-driver RF module is a MHW 820 Hybrid power amplifier providing approximately 20 dB of power gain. This stage supplies 15 Watts of input power to the driver amplifier. The driver stage provides 35 to 40 Watts to the 2 Way power splitter and this power is divided equally between the 2 final amplifier stages. Each final amplifier stage provides 150 Watts to the 2 Way quadrature combiner resulting in 250 Watts of RF output power. Rigid line coax cable and double shielded Teflon cable are used for all high power RF interconnections.

The DC distribution board terminates and fuses the incoming DC voltage. Reverse-polarity protects and distributes this voltage to the modular sub-assemblies.

More detailed information on the modules in this amplifier can be found in their individual technical descriptions.

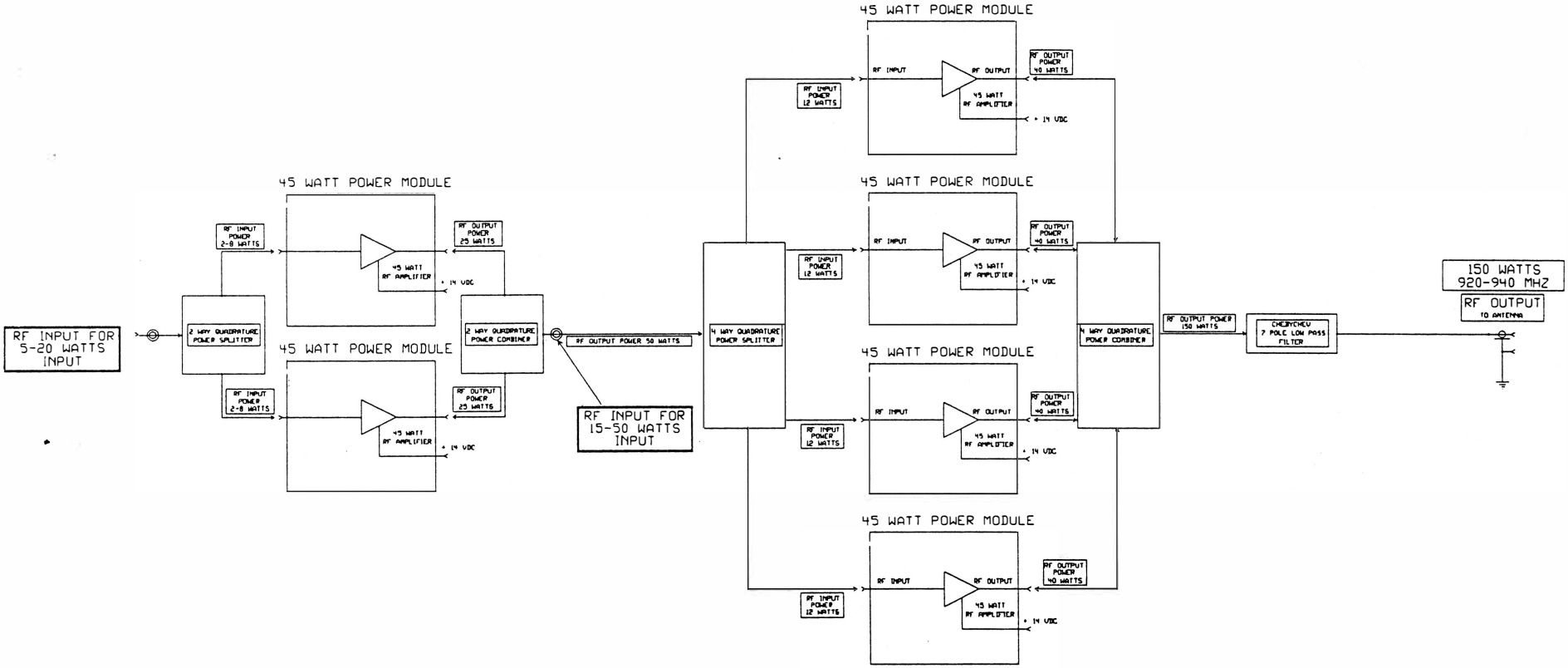

FUNCTIONAL BLOCK DIAGRAM
150 WATT 920-940 MHZ +14 VDC
FM RF POWER AMPLIFIER

Fig. 3.0

MILCOM INTERNATIONAL 10891 CAPITAL AVE GARDEN GROVE, CA 92640	
SCHEMATIC DIAGRAM	
DESCRIPTION FUNCTIONAL BLOCK DIAGRAM	
USED ON KW SERIES, CB STAND PRODUCT	
MODULE ASSEMBLY NO	
CIRCUIT DESCRIPTION NO	
DRAWN BY LINH V LE	DATE 12-22-92
PCB PN	REV
TDS 950-118	REV A

SIMPLIFIED BLOCK DIAGRAM

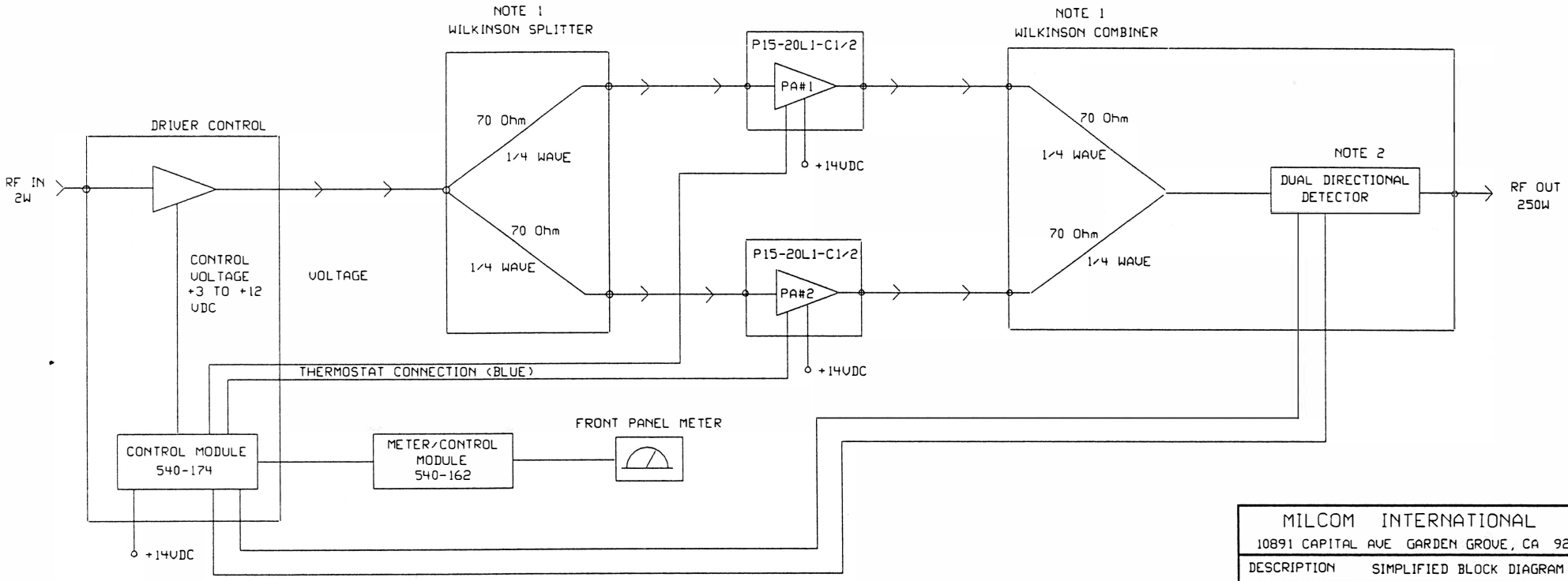

MILCOM INTERNATIONAL	
10891 CAPITAL AVE GARDEN GROVE, CA 92643	
DESCRIPTION	SIMPLIFIED BLOCK DIAGRAM
USED ON	KW SERIES, C8 STAND PRODUCT
DRAWN BY LINH V LE	DATE 12-23-92
TDS 950-127	REV:

NOTES

1 BOTH SPLITTER & COMBINER ARE LOCATED IN THE MODULE LOCATED ON THE REAR DOOR

2 ON EARLY MODELS, THE DUAL DIRECTIONAL DETECTOR WAS LOCATED ON THE OUTSIDE REAR DOOR ON THE LATER MODELS, IT IS LOCATED INSIDE THE COMBINER/SPLITTER MODULE

Fig. 3.1

3.2 900 MHz, 2 WAY POWER SPLITTER & COMBINER

The power splitter and power combiner are designed utilizing hybrid WIRELINE. This method offers the advantage of greater isolation between power amplifier modules, the source and the load. This combiner is unique in that approximately 3 dB of the power reflected from the output load is absorbed in the port termination resistors, R1 and R2. This feature makes the amplifier unconditionally stable under almost all mismatch conditions and virtually immune to damage due to mismatches on the output. Figure 3.2 shows a schematic diagram of the 2-Way Power Splitter & Combiner.

The input power splitter, A8, consists of T1. T1 divides the input power, 35 to 40 Watts, equally between A1 and A2. The amplifier modules, A1 through A2 therefore receive about 15 Watts each at their input terminal. A 180 degrees phase shift occurs between alternate modules. A1 is 180 degrees out of phase with A2.

The output power combiner, A9, consists of T1. Each amplifier module, A1 through A2, produces 45 to 50 Watts. The power output of A1 and A2 is combined by T4 resulting in 90 Watts of power output. The combiner also shifts the phase of the amplified signals such that 0 degrees phase difference results at the output of the power combiner.

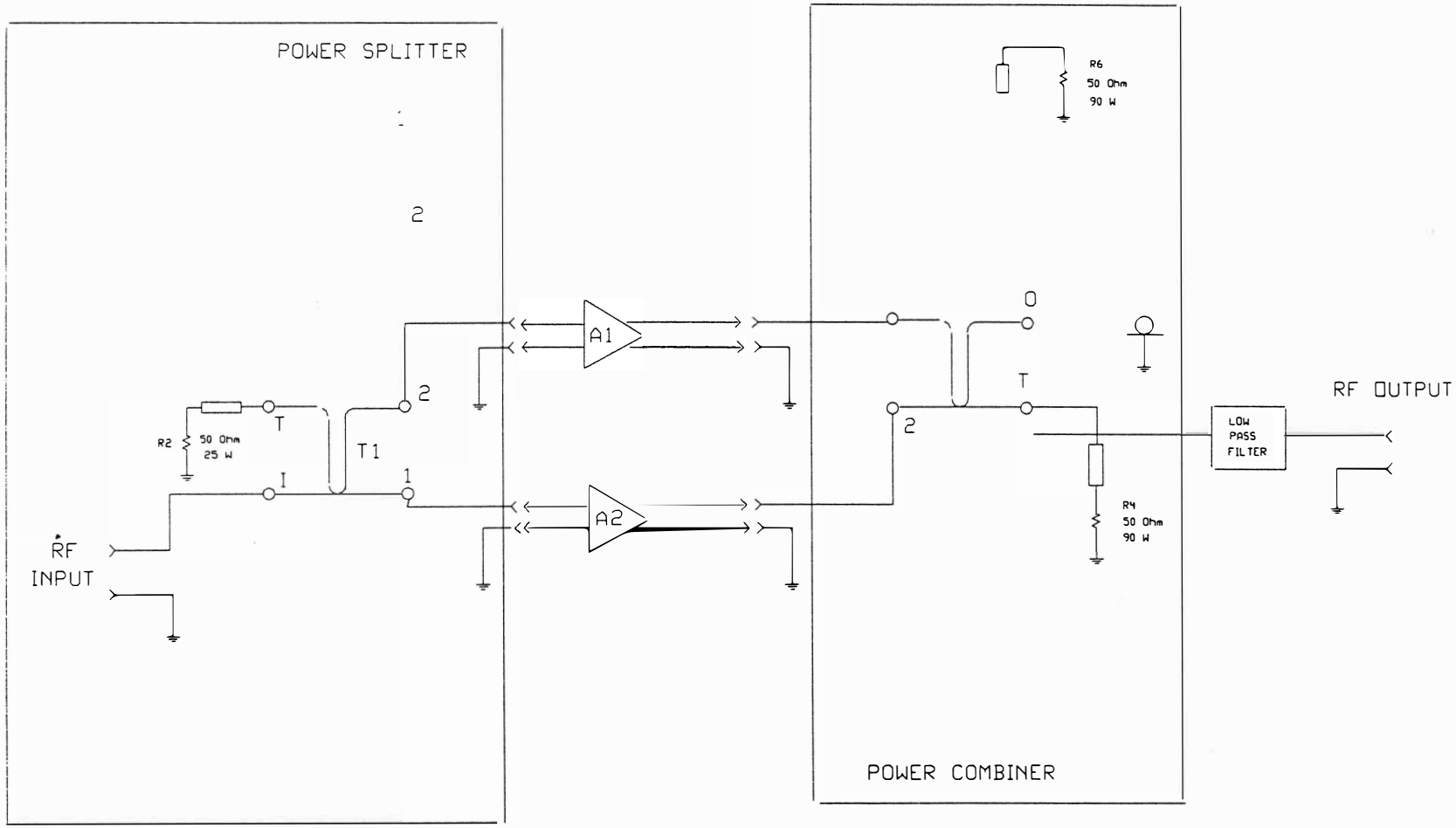

LEGEND

T = TERMINATION PORT (50 Ohm)
1 = INPUT PORT (RF PWR IN)
O = OUTPUT PORT (RF PWR OUT)
1 & 2 = LOAD OR SOURCE PORTS

Fig. 3.2

MILCOM INTERNATIONAL Milcom 10891 CAPITAL AVE GARDEN GROVE, CA 92640		
SCHEMATIC DIAGRAM		
DESCRIPTION 2 WAY POWER SPLITTER & POWER COMBINER		
MODULE ASSEMBLY NO		
CIRCUIT DESCRIPTION NO		
DRAWN BY R. HEILMAN	DATE 01-12-93	
PCB PN	REV	
TDS	REV: A	

PRODUCT	ASSEMBLY REFERENCE NO
	A8, A9
	A8, A9
	A8, A9

3.3 900 MHz, 4 WAY POWER SPLITTER & COMBINER

The power splitter and power combiner are quadrature designs utilizing hybrid WIRELINE. This method offers the advantage of greater isolation between power amplifier modules, the source and the load. This combiner is unique in that approximately 3 dB of the power reflected from the output load is absorbed in the port termination resistors, R1,R2,R3,R4,R5 and R6. this feature makes the amplifier unconditionally stable under almost all mismatch conditions and virtually immune to damage due to mismatches on the output. Figure 3.3 shows a schematic diagram of the 4-Way Power Splitter & Combiner.

The input power splitter, A8 consists of T1, T2, and T3. T1 divides the input power, 48 to 54 Watts, equally between T2 and T3. T2 and T3 again divide the power equally between A1, A2, and A4. The amplifier modules, A1 through A4 therefore receive about 12 Watts each at their input terminal. A 90 degrees phase shift occurs between alternate modules. A1 is 90 degrees out of phase with A2 and A3 is 90 degrees out of phase with A4. The module pair A1 and A2 is 90 degrees out of phase with the module pair A3 and A4.

The output power combiner, A9 consists of T4,T5 and T6. Each amplifier module, A1 through A4, produces 40 to 45 Watts. The power output of A1 and A2 is combined by T6 and the power output of A3 and A4 is combined by T5. The power combined by T5 and T6 is then combined by T4 resulting in 150 to 170 Watts of output power. The combiner also shifts the phase of the amplifier signals such that 0 degrees of phase difference results at the output of the power combiner.

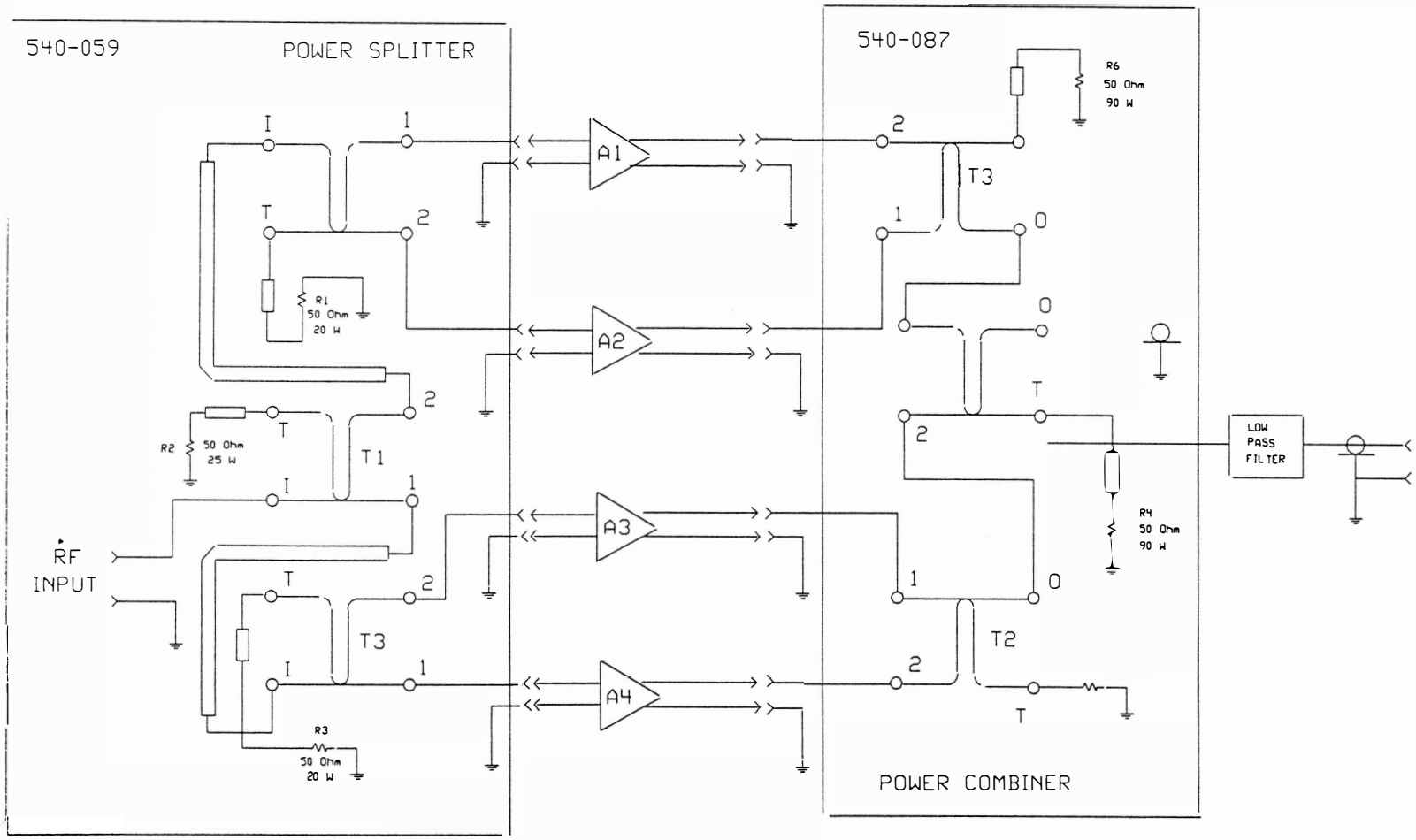

LEGEND

T = TERMINATION PORT (50 Ohm)
I = INPUT PORT (RF PWR IN)
O = OUTPUT PORT (RF PWR OUT)
1 & 2 = LOAD OR SOURCE PORTS

MILCOM INTERNATIONAL
Milcom 10891 CAPITAL AVE GARDEN GROVE, CA 92640

SCHEMATIC DIAGRAM

DESCRIPTION 4 WAY POWER SPLITTER & POWER COMBINER
150 WATTS RF AMPLIFIER 806 TO 890 MHz

MODULE ASSEMBLY NO 540-059 & 540-087

CIRCUIT DESCRIPTION NO

DRAWN BY LINH LE DATE 01-12-93

PCB PN 240-059 & 240-087 REV

TDS 950-136 REV: A

PRODUCT	ASSEMBLY REFERENCE NO
P15-2L1	A8, A9
P15-05L1	A8, A9
P15-15L1	A8, A9

Fig. 3.3

3.4 DC DISTRIBUTION BOARD

The DC distribution board serves several functions. It provides a termination point for the incoming high current DC voltage, a convenient mounting for the DC power line fuses, a mounting for the reverse protection diodes and a distribution point for DC power to the modular sub-assemblies.

The compartment where the distribution board is mounted receives high current DC voltage from J101 through four RFI feed thru filters FL1 through FL4. This voltage is terminated at terminal board TB1. Figure 3.4 shows a schematic diagram of the DC distribution board.

Diodes CR1 through CR4 protect the amplifier from damage due to reverse polarity and internal shorts. Each D.C. distribution board has seven 15 ampere fuses installed. These fuses are not intended to protect the RF power transistors from damage due to mismatch or over drive.

The eyelet terminals on TB2 are used to distribute the DC power to the amplifier and control modules.

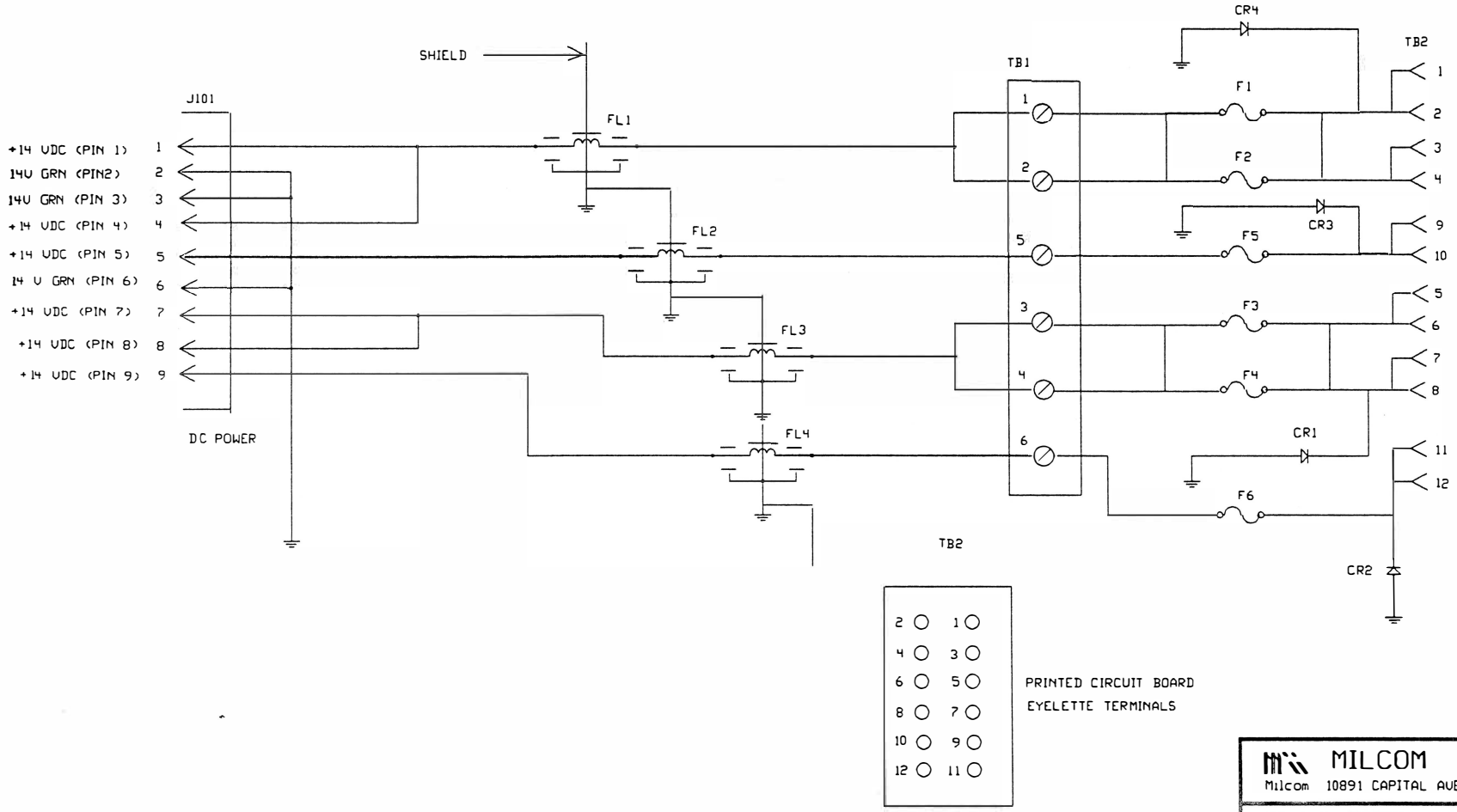

Fig. 3.4

MILCOM INTERNATIONAL Milcom 10891 CAPITAL AVE GARDEN GROVE, CA 92640	
SCHEMATIC DIAGRAM	
DESCRIPTION	DC DISTRIBUTION BOARD & EXTERNAL CONTACTS
USE ON	
MODULE ASSEMBLY NO	540-083A
CIRCUIT DESCRIPTION NO	
DRAWN BY L LE	DATE 01-13-93
PCB PN	REV
TDS 950-138	REV: A

3.5 45 WATT 900 MHz COMMON BASE AMPLIFIER

This module is common to all 14V 900 MHz RF power amplifiers. It is used as a driver and final amplifier. The only difference between the driver module and the final amplifier modules is a variable capacitor, C2, used in the driver module for minimizing the input VSWR when the input power is greater than 5 Watts, and a 1000pF chip capacitor on the T4 trace. This capacitor is located below the 56pF chip capacitor also on the T4 trace. Figure 3.5 shows a schematic diagram of the 45 Watt, 900 MHz Common Base Amplifier.

DC voltage is fed to the collector through tuning stub T4. The exact length of this tuning stub is adjusted by changing the location of C14. L3 and L4 along with C12,C7,C8,C13 and C10 decouple the DC supply line from the Collector matching circuitry. C11 is a DC blocking capacitor.

The collector load impedance is matched to 50 ohms through metal clad mica capacitor C5, porcelain chip capacitor C6, air variable capacitor C9, Microstrip transmission lines are printed on Teflon Glass circuit board.

The emitter is matched to 50 ohms through metal clad mica capacitors C3 and C4, air variable capacitor C2, microstrip transmission line transformer T1 and microstrip stub T2. The DC return path to the emitter is through T1 and T2.

The circuit board utilizes plated through holes for ground return and low inductance base contacts. Ground connections to the combiner and splitter are made through mechanical contact with the aluminum spacer plates. This method has proven to be highly reliable while at the same time simplifying manufacturing and field replacement. DC contact is made through two pins on J1.

Because component placement is critical at these frequencies, amplifier modules are manufactured on an assembly fixture to assure correct component placement and uniformity. Therefore, field repair of these amplifier modules is not recommended.

Attempt

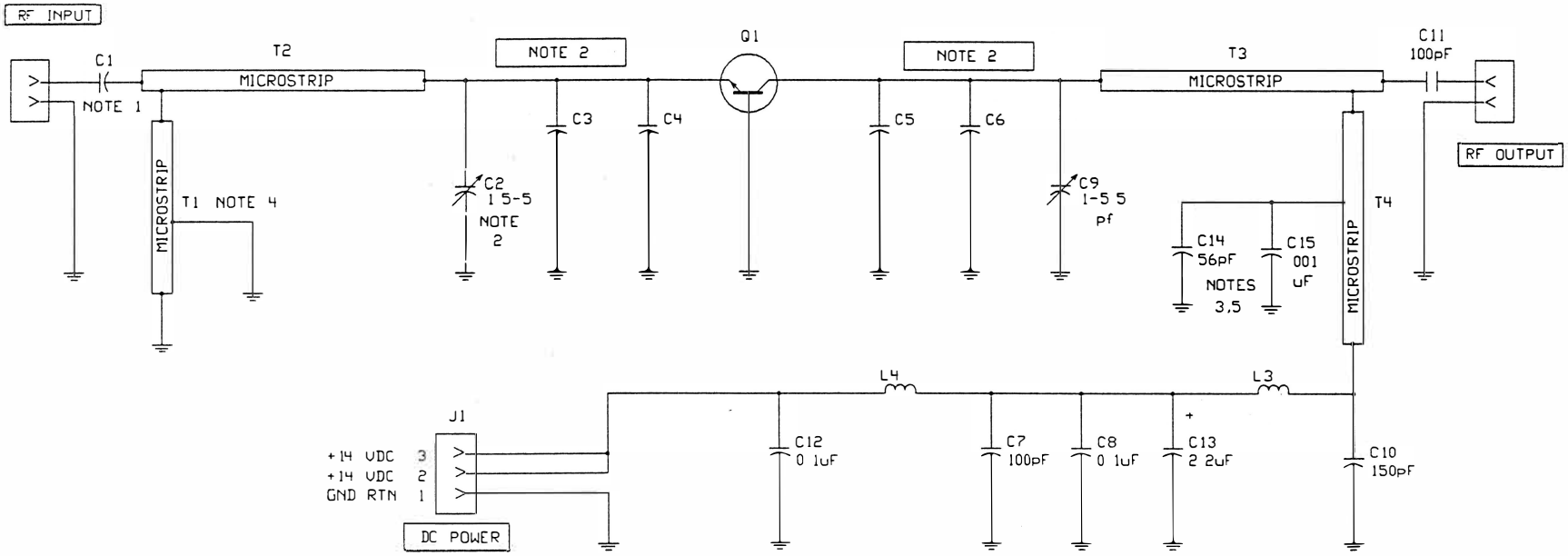

Fig. 3.5

FREQUENCY SELECTABLE CAPACITORS						
MODULE PN	FREQ	C3	C4	C5	C6	C9A
540-061J45	780-806 MHz	12	15	15	15	2 2
540-061K45	806-890 MHz	12	10	10	12	N/A
540-061L45	915-940 MHz	10	10	10	12	N/A
540-061M45	940-960 MHz	10	10	10	10	N/A

NOTES

1 C1 IS USED ON DRIVER MODULES ONLY
2 C2 IS USED ON DRIVER AND REPLACEMENT PA MODULES ONLY
3 LOCATION OF C14 IS DIFFERENT FOR THE 850-890 AND 935-940 MHZ RANGES
LOCATION IS FACTORY ADJUSTED FOR MAXIMUM POWER OUTPUT
4 LOCATION OF JUMPER IS DIFFERENT FOR THE 850-890 AND 935-940 MHZ RANGES
LOCATION IS FACTORY ADJUSTED FOR MINIMUM REFLECTED POWER

MILCOM INTERNATIONAL Milcom 10891 CAPITAL AVE GARDEN GROVE, CA 92640	
SCHEMATIC DIAGRAM 911-061	
DESCRIPTION 45 WATT RF POWER AMPLIFIER MODULE	
USED ON ALL 806 TO 960 MHZ 14VDC RF POWER AMPLIFIERS	
MODULE ASSEMBLY NO 540-061	
CIRCUIT DESCRIPTION NO TD 112	FILE NAME 45W800SC
DRAWN BY LINH LE	DATE 01-11-93
PCB PN 240-061	REV F
TDS 950-134	REV A

3.6 15 WATT, 16 dB GAIN HYBRID POWER AMPLIFIER

This amplifier module utilizes a 15 Watt hybrid power amplifier module manufactured by Motorola Semiconductor. The module is mounted directly to the heat sink with its leads soldered to a circuit board where DC supply voltage and RF input and output connections are made. Figure 3.6 shows a schematic diagram of the Hybrid Power Amplifier.

DC supply line isolation is achieved through L1, L2, L3, C1, C2, C3, C4, C5, C6, C7, C8, C9, C10 and C11.

RF input and output connections are made to microstrip transmission lines connected at terminals 1 and 5.

14 Volts is supplied to the final amplifier stage through hybrid amplifier pin number 4. This voltage enters the circuit board at J1 pin 2.

A variable voltage is supplied to the pre-amplifier and driver amplifier stages on the hybrid amplifier pin number 3. This voltage is varied in order to adjust amplifier power output.

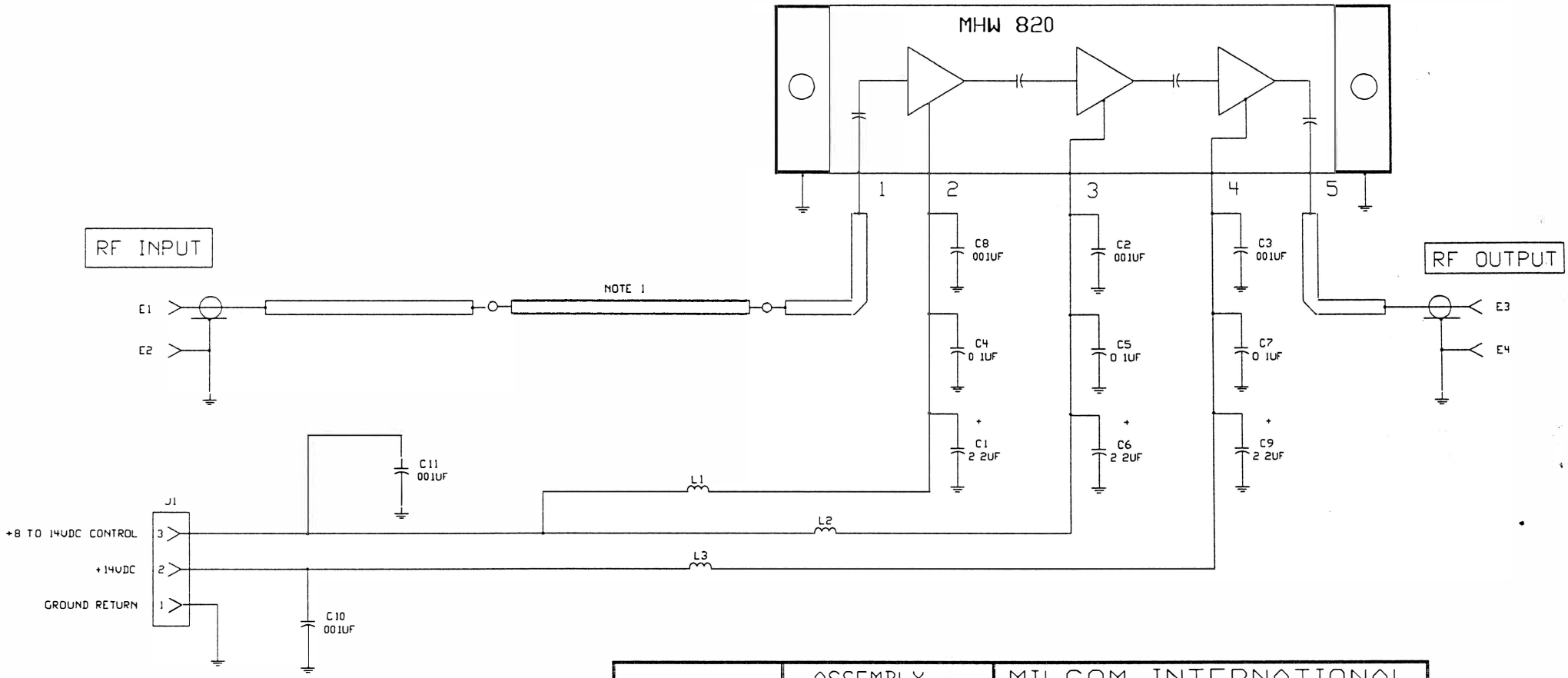

NOTES

1 FOR POWER INPUT LEVELS BELOW 500 MW THE ATTENUATOR IS BYPASSED

PRODUCT		ASSEMBLY REFERENCE NO
P18-02K1	P18-05K1	A6
P12-02L1	P12-05L1	A6
P15-02L1	P15-05L1	A6
P15-2L1		A6

MILCOM INTERNATIONAL

SCHEMATIC DIAGRAM 902-108

DESCRIPTION 20 WATT HYBRID RF POWER MODULE

USED ON ALL 120 & 150 WATT 806-960 MHZ RF POWER AMPLIFIERS

MODULE ASSEMBLY NO 540-071

PRINTED CIRCUIT BOARD LAYOUT NO 902-102

BILL OF MATERIALS DWG NO 902-110

CIRCUIT DESCRIPTION NO TD 116 20WB00HS DWG

TDS 950-128

Fig. 3.6

3.7 7 POLE LOW PASS FILTER

This seven pole low pass filter is a Chebychev 0.1 dB ripple design. It attenuates all harmonics by a minimum of 35 dB. Figure 3.7 shows a schematic diagram of the filter.

The inductors, L1, L2 and L3, are 0.020 brass stampings for minimum loss and high repeatability.

Capacitors, C1, C2, C3 and C4 are printed on Teflon glass circuit board.

Even though this filter only has 0.1 to 0.2 dB of loss it is attached directly to the main heat sink to avoid heat build up.

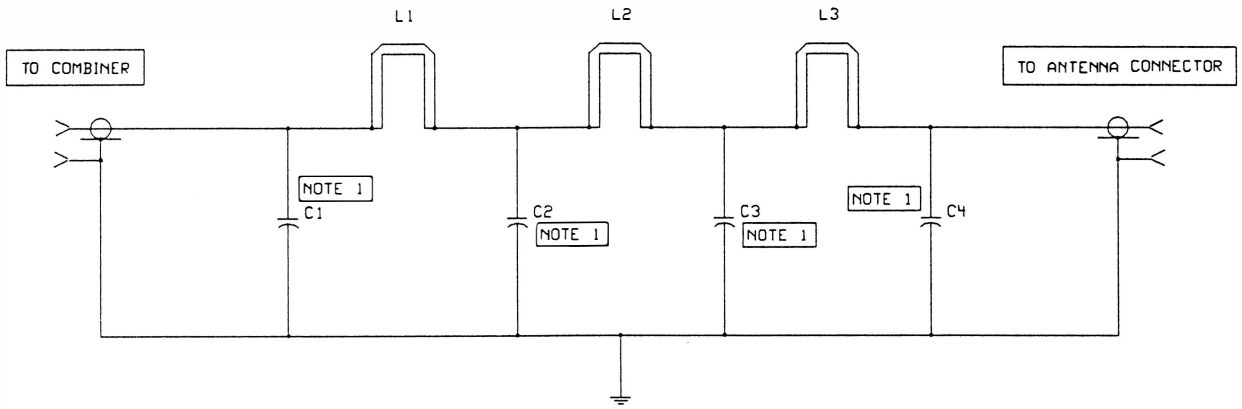

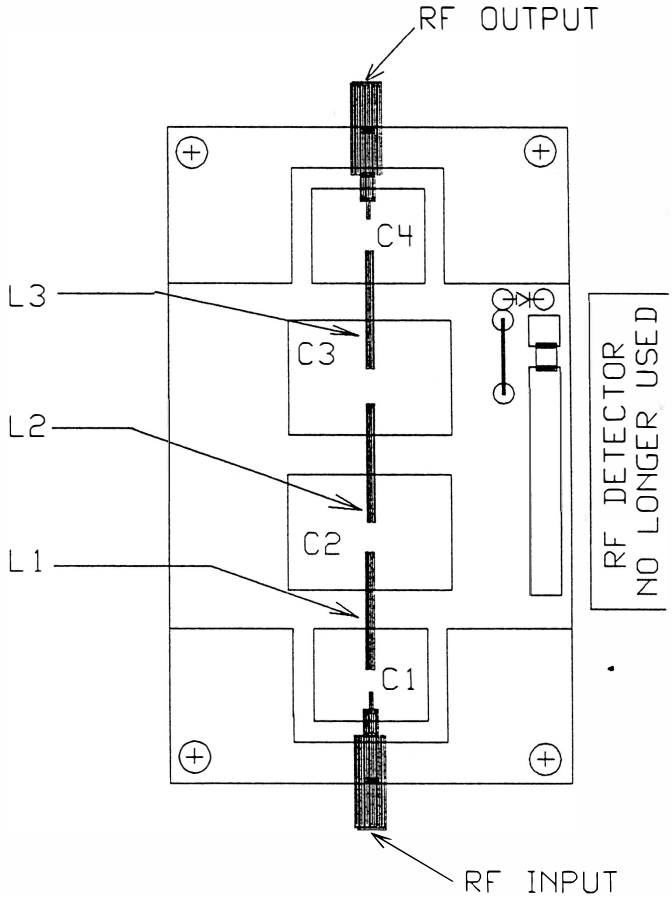

Fig. 3.7

NOTES

1 C1,C2,C3,C4 ARE PRINTED CIRCUIT BOARD CAPACITORS

PRODUCT	ASSEMBLY REFERENCE NO
P15-05L1	A12
P25-05L1	A12
P25-2L1	A12

MILCOM INTERNATIONAL

SCHEMATIC DIAGRAM 902-103

DESCRIPTION 7 POLE LOW PASS FILTER 890 MHZ C/O

USED ON ALL 806 TO 960 MHZ RF AMPLIFIERS

MODULE ASSEMBLY NO 540-066A

PRINTED CIRCUIT BOARD LAYOUT NO 902-104

BILL OF MATERIALS DWG NO 902-105

CIRCUIT DESCRIPTION NO TD 114 960LPFSC

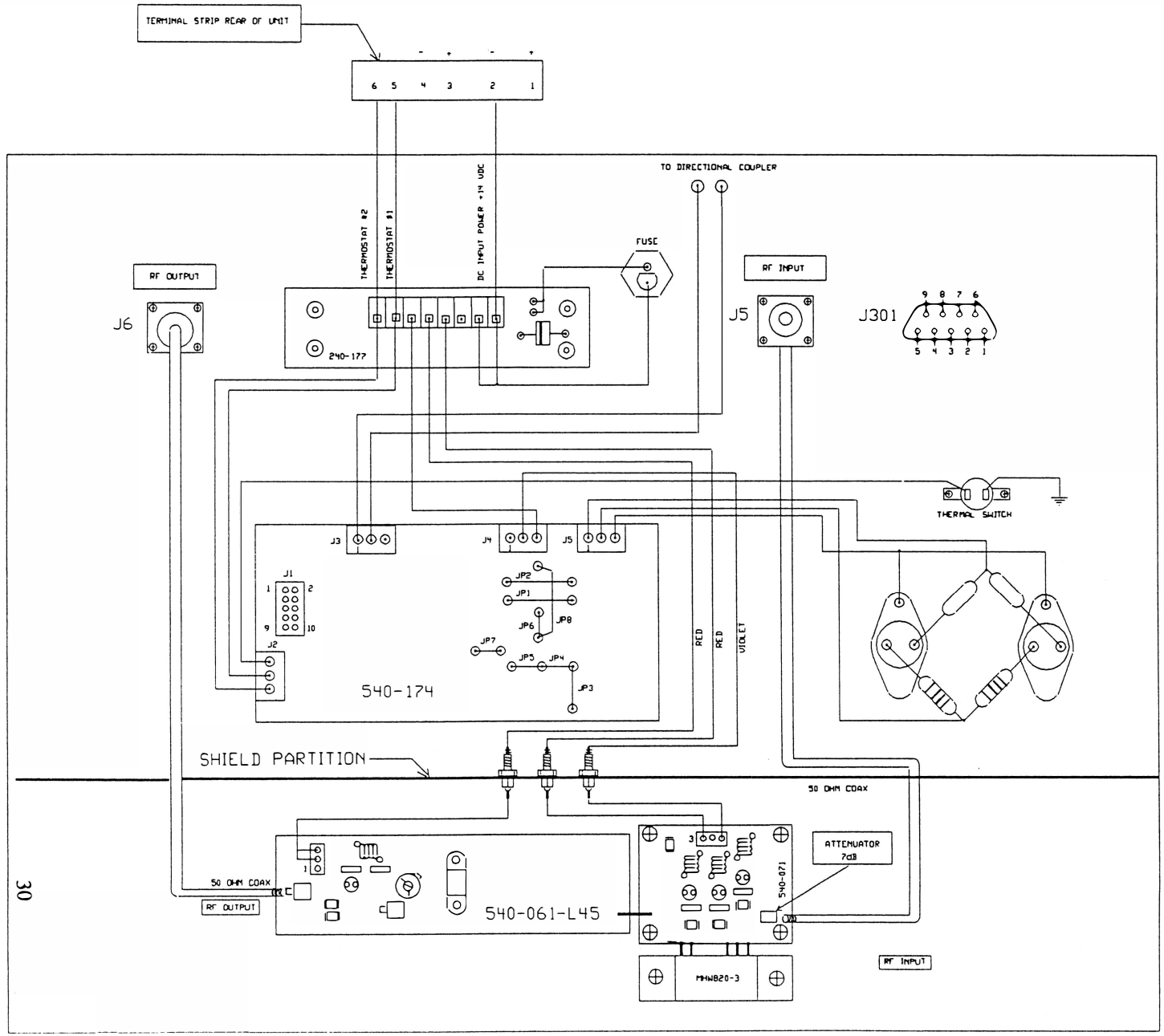

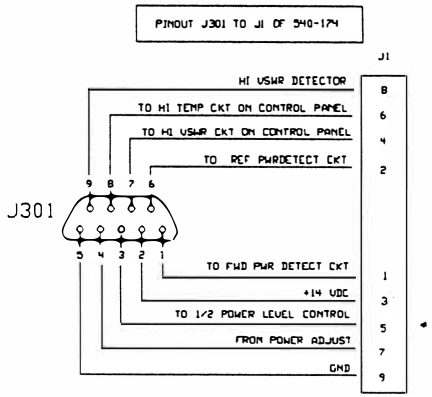

Fig. 3.8

MILCOM INTERNATIONAL 10891 CAPITAL AVE GARDEN GROVE, CA 92640		
SCHEMATIC DIAGRAM	TDS 950-122	
DESCRIPTION	DRIVER/CONTROL MODULE	
USED ON	KW SERIES CB STAND PRODUCT	
MODULE ASSEMBLY NO		
CIRCUIT DESCRIPTION NO		
DRAWN BY LINH U LE	DATE 12-22-92	
PCB PN	REV	
TDS 950-120	REV	

SECTION IV

MAINTENANCE

4.1 AMPLIFIER SERVICE PROCEDURES

Since the field adjustments are minimal, if required at all, the primary service function is that of verifying the proper operation of the amplifier and troubleshooting failures to the module level. Refer to figures 4.1 and 4.2 for all adjustment locations.

If it is necessary to verify the proper operation of the amplifier, the test setup illustrated in figure 4.3 is recommended. Care should be taken to make the RF output and input cables as short as possible. In the 450 and 512 MHz and 806 to 890 MHz frequency ranges the power output connection to the Watt meter should be no longer than 12 inches, and RG 214 or equivalent coaxial cable should be used. The power output specifications are based on power available at the power output connector and long or high-loss cables before the Watt meter may result in disagreement with the published specifications.

The transmitter/exciter the amplifier will be used with may, be substituted for the sweep oscillator and broad band power amplifier. Additionally, a spectrum analyzer is not an absolute necessity, however, the test set-up in figure 4.3 is the same as that used by the factory and duplication of it will assure accurate measurements.

A well regulated DC power supply or battery should be used as a source for the operating voltage. Power Amplifiers require a considerable amount of current and therefore the power supply used must be well regulated and free of voltage transients or damage to the amplifier may occur during on/off cycles. A battery eliminator or charger should not be used as a DC power supply since these units can surge up to 20 volts under no load conditions and damage the RF power transistors.

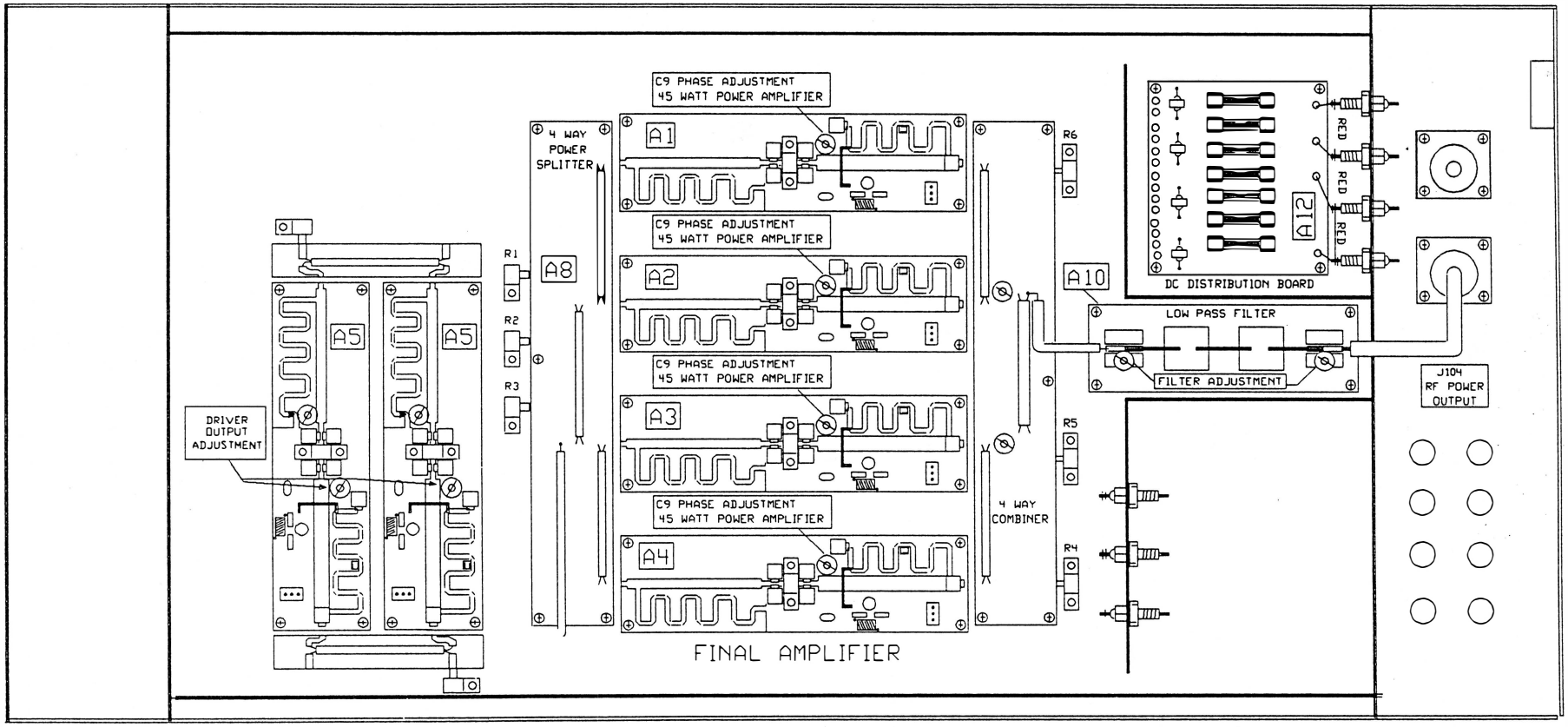

Fig. 4.1

MODULE AND ADJUSTMENT LOCATION
150 WATT 920-960 MHz +14 VDC
RF POWER AMPLIFIER

MILCOM INTERNATIONAL, INC

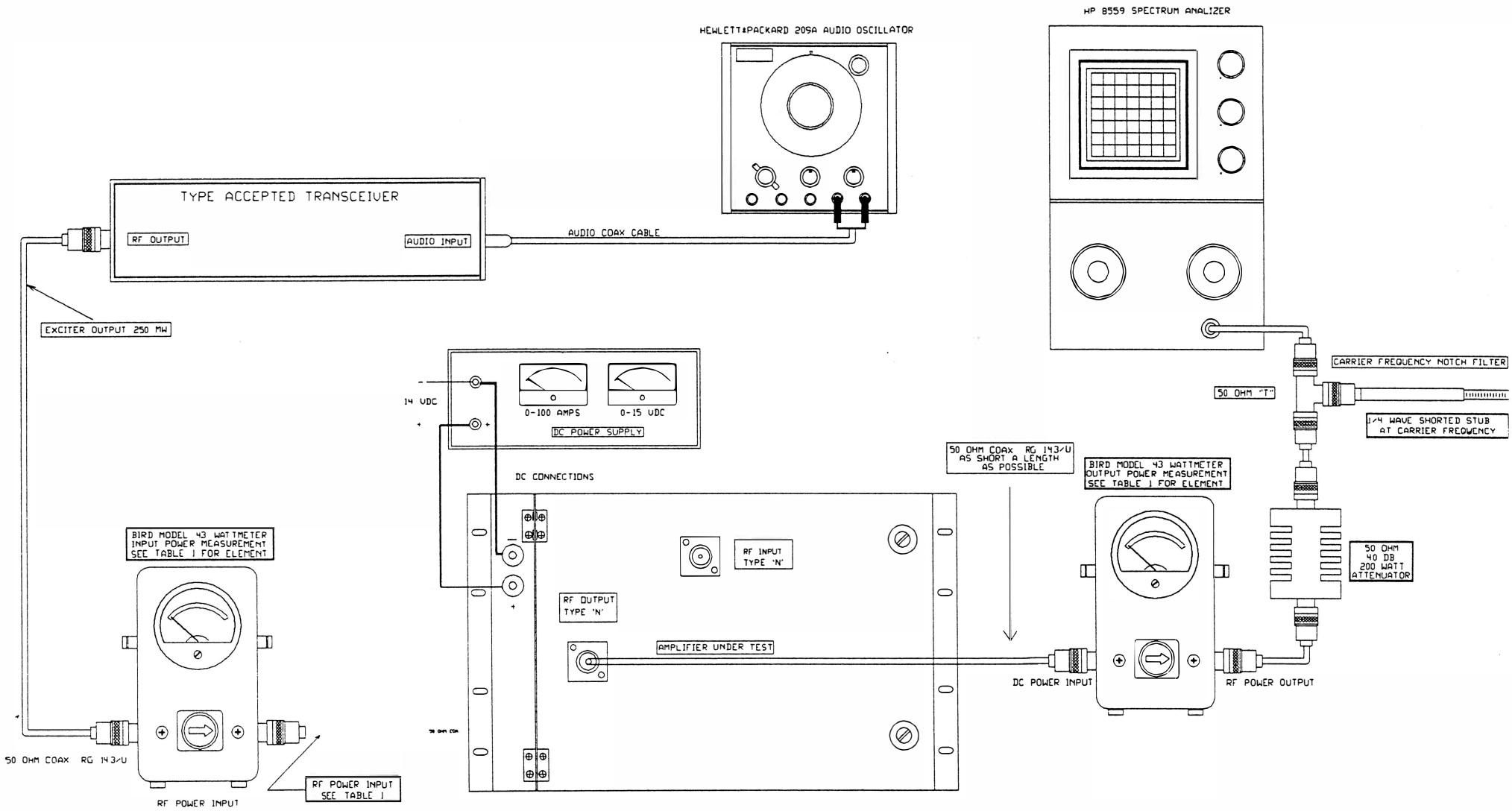

TDS 950-072

POWER AMPLIFIER TEST SETUP
MILCOM INTERNATIONAL, INC

Fig. 4.3

4.2 AMPLIFIER ADJUSTMENT INSTRUCTIONS

Applicable to the models listed below:

MODEL	FREQUENCY	POWER INPUT	VDC
P25-02L1-C1	930-940 MHz	50 mW	14
P25-05L1-C1	930-940 MHz	250 mW	14
P25- 2L1-C1	930-940 MHz	2.0 W	14
P25-15L1-C1	930-940 MHz	15 W	14

Equipment Required: See Test Set-up

STEP	ADJUSTMENT	PROCEDURE	NOTES
1.			P25-02L1-C1 and P25-05L1-C1 and P25- 2L1-C1 only
2.			P25-02L1-C1 and P25-05L1-C1 and P25- 2L1-C1 only
3.	C2 on A1	Adjust C2 for minimum reflected power at J103	P25-15L1-C1 only
4.			
5.			P25-02L1-C1 and P25-05L1-C1 and P25--2L1-C1 and P25-15L1-C1
6.			P25-02L1-C1 and P25-05L1-C1 and P25- 2L1-C1 only
7.			P25-02L1-C1 and P25-05L1-C1 and P25- 2L1-C1 only

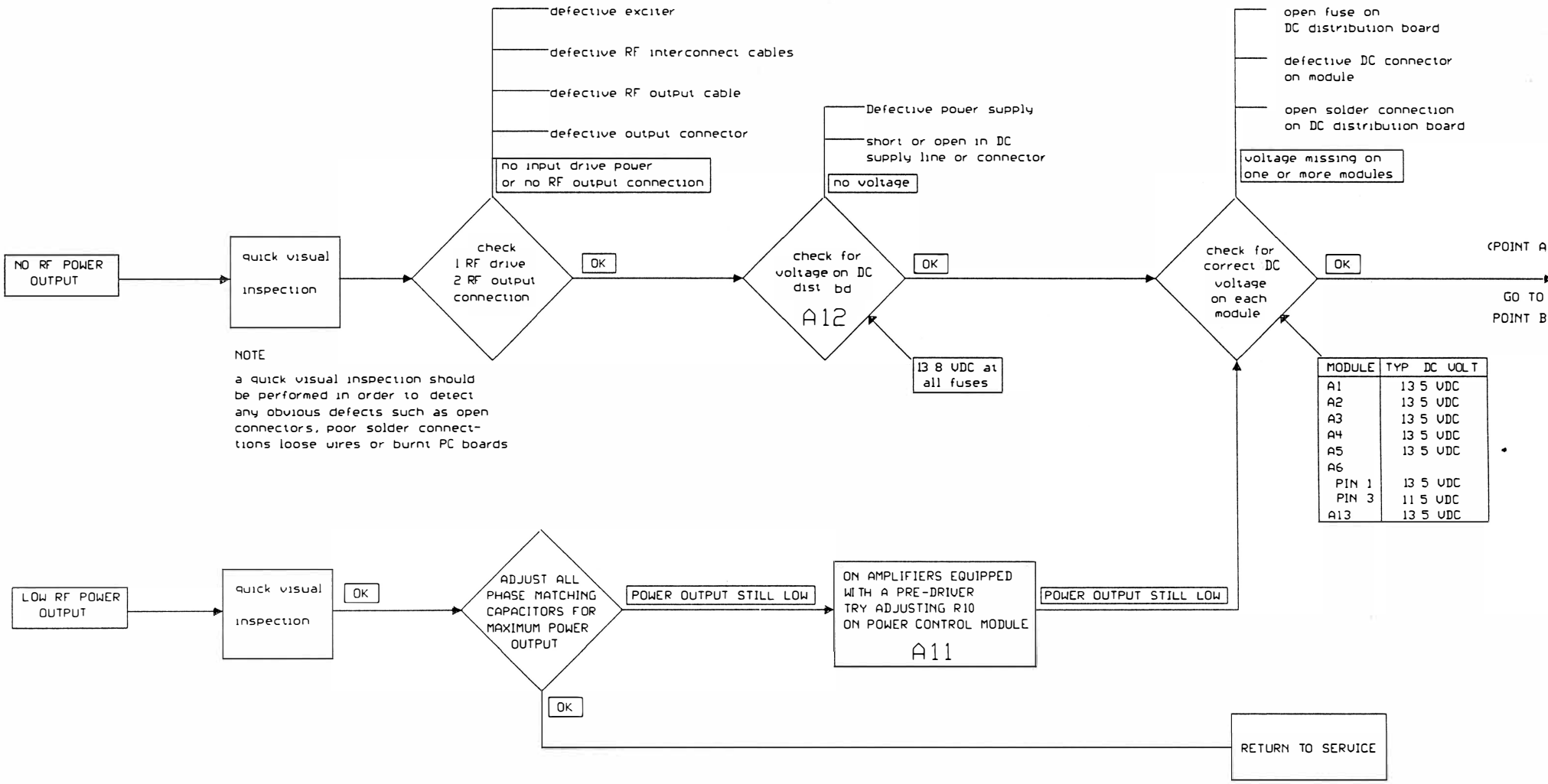
NO RF POWER OUTPUT
quick visual inspection
NOTE
a quick visual inspection should be performed in order to detect any obvious defects such as open connectors, poor solder connections loose wires or burnt PC boards
check 1 RF drive 2 RF output connection
OK
defective exciter
defective RF interconnect cables
defective RF output cable
defective output connector
no input drive power or no RF output connection
check for voltage on DC dist bd
A12
OK
Defective power supply
short or open in DC supply line or connector
no voltage
13 8 VDC at all fuses
check for correct DC voltage on each module
OK
open fuse on DC distribution board
defective DC connector on module
open solder connection on DC distribution board
voltage missing on one or more modules
(POINT A
GO TO POINT B
MODULE | TYP DC VOLT
A1 | 13 5 VDC
A2 | 13 5 VDC
A3 | 13 5 VDC
A4 | 13 5 VDC
A5 | 13 5 VDC
A6
PIN 1 | 13 5 VDC
PIN 3 | 11 5 VDC
A13 | 13 5 VDC
LOW RF POWER OUTPUT
quick visual inspection
OK
ADJUST ALL PHASE MATCHING CAPACITORS FOR MAXIMUM POWER OUTPUT
POWER OUTPUT STILL LOW
ON AMPLIFIERS EQUIPPED WITH A PRE-DRIVER TRY ADJUSTING R10 ON POWER CONTROL MODULE
A11
POWER OUTPUT STILL LOW
OK
RETURN TO SERVICE

Fig. 4.4-1

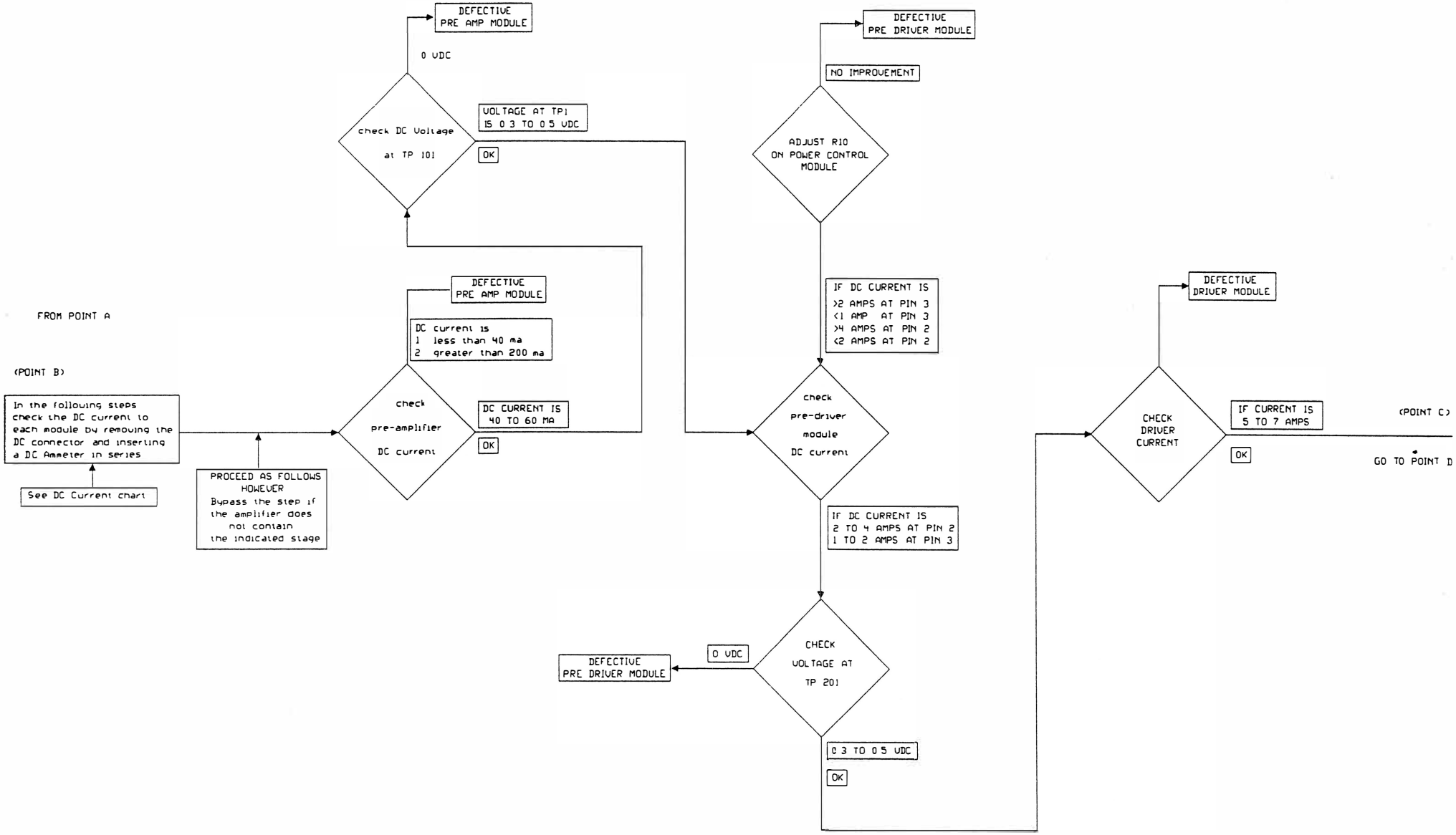
FROM POINT A
(POINT B)
In the following steps check the DC current to each module by removing the DC connector and inserting a DC Ammeter in series
See DC Current chart
PROCEED AS FOLLOWS HOWEVER
Bypass the step if the amplifier does not contain the indicated stage
check pre-amplifier DC current
DC current is
1 less than 40 ma
2 greater than 200 ma
DEFECTIVE PRE AMP MODULE
DC CURRENT IS 40 TO 60 MA
OK
check DC Voltage at TP 101
0 VDC
DEFECTIVE PRE AMP MODULE
VOLTAGE AT TP1 IS 0 3 TO 0 5 VDC
OK
check pre-driver module DC current
IF DC CURRENT IS
>2 AMPS AT PIN 3
<1 AMP AT PIN 3
>4 AMPS AT PIN 2
<2 AMPS AT PIN 2
ADJUST R10 ON POWER CONTROL MODULE
NO IMPROVEMENT
DEFECTIVE PRE DRIVER MODULE
IF DC CURRENT IS
2 TO 4 AMPS AT PIN 2
1 TO 2 AMPS AT PIN 3
CHECK VOLTAGE AT TP 201
0 VDC
DEFECTIVE PRE DRIVER MODULE
0 3 TO 0 5 VDC
OK
CHECK DRIVER CURRENT
DEFECTIVE DRIVER MODULE
IF CURRENT IS 5 TO 7 AMPS
OK
(POINT C)
GO TO POINT D

Fig. 4.4-2

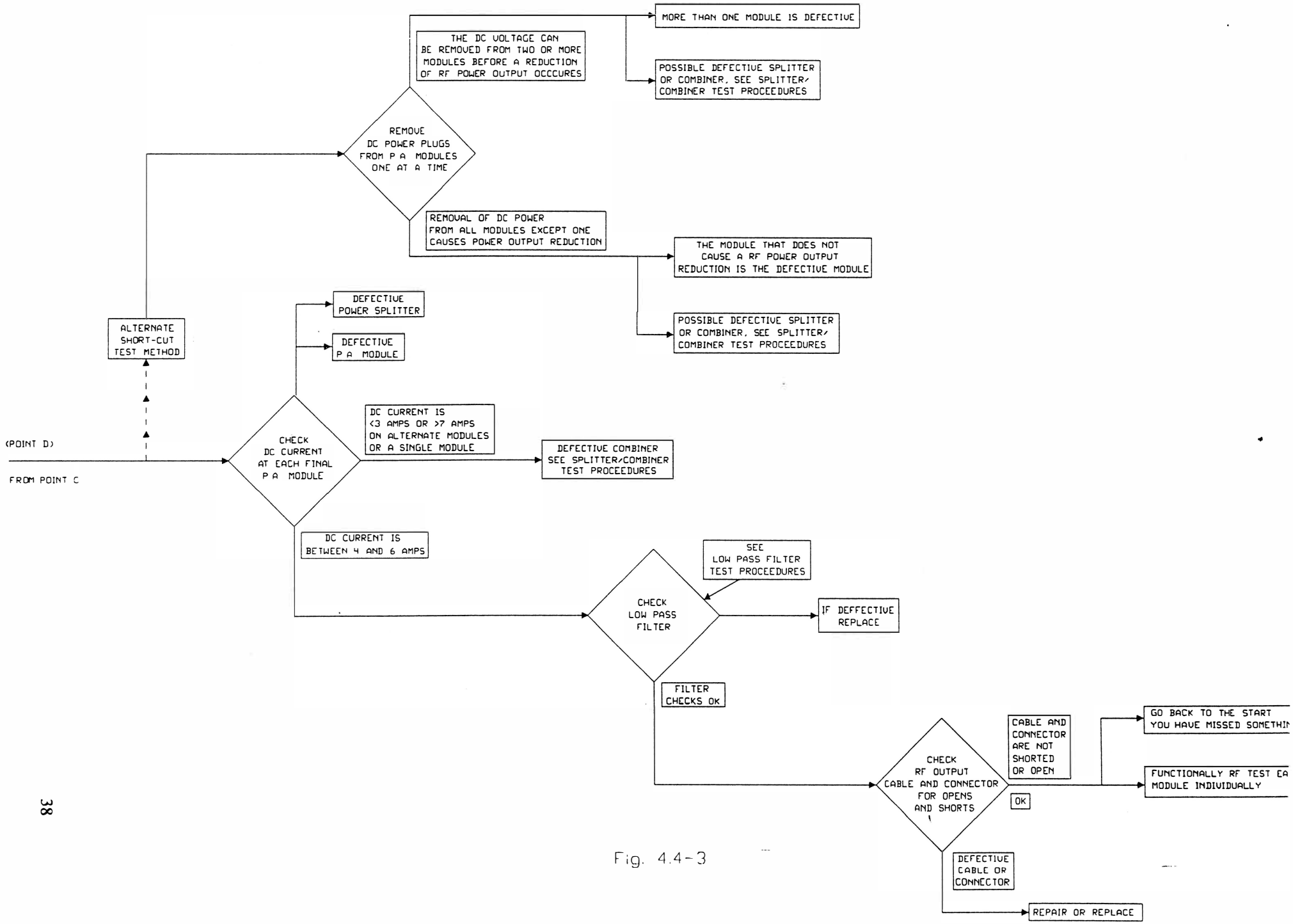
(POINT D)
FROM POINT C
ALTERNATE SHORT-CUT TEST METHOD
CHECK DC CURRENT AT EACH FINAL P A MODULE
DEFECTIVE POWER SPLITTER
DEFECTIVE P A MODULE
DC CURRENT IS <3 AMPS OR >7 AMPS ON ALTERNATE MODULES OR A SINGLE MODULE
DEFECTIVE COMBINER SEE SPLITTER/COMBINER TEST PROCEEDURES
DC CURRENT IS BETWEEN 4 AND 6 AMPS
REMOVE DC POWER PLUGS FROM P A MODULES ONE AT A TIME
THE DC VOLTAGE CAN BE REMOVED FROM TWO OR MORE MODULES BEFORE A REDUCTION OF RF POWER OUTPUT OCCCURES
MORE THAN ONE MODULE IS DEFECTIVE
POSSIBLE DEFECTIVE SPLITTER OR COMBINER, SEE SPLITTER/ COMBINER TEST PROCEEDURES
REMOVAL OF DC POWER FROM ALL MODULES EXCEPT ONE CAUSES POWER OUTPUT REDUCTION
THE MODULE THAT DOES NOT CAUSE A RF POWER OUTPUT REDUCTION IS THE DEFECTIVE MODULE
POSSIBLE DEFECTIVE SPLITTER OR COMBINER, SEE SPLITTER/ COMBINER TEST PROCEEDURES
CHECK LOW PASS FILTER
SEE LOW PASS FILTER TEST PROCEEDURES
IF DEFFECTIVE REPLACE
FILTER CHECKS OK
CHECK RF OUTPUT CABLE AND CONNECTOR FOR OPENS AND SHORTS
CABLE AND CONNECTOR ARE NOT SHORTED OR OPEN
GO BACK TO THE START YOU HAVE MISSED SOMETHIN
OK
FUNCTIONALLY RF TEST EA MODULE INDIVIDUALLY
DEFECTIVE CABLE OR CONNECTOR
REPAIR OR REPLACE

Fig. 4.4-3

SECTION V

Replacement Parts List

5.1 Introduction

This section contains the amplifier parts lists in addition to information necessary for ordering spare parts and replacement parts.

5.2 Correspondence and Ordering of Spare Parts

When ordering spare and replacement parts the user should follow the logistics procedures established by his organization. Where activities are authorized to order directly from Milcom, parts and additional service information can be obtained from:

Milcom International, Inc.
10891 Capital Ave.
Garden Grove, Calif.
92643-4953

Telephone: (714) 554-1710
Fax: (714) 554-3090

When requesting information, or ordering spare replacement parts from Milcom, the following information should be supplied:

A. Name, Model No. and serial number of the amplifier

B. Part number and/or stock number

5.3 Parts Supplied (BOM's)

Table 5.0 lists the major components for the following amplifier models:

P25-02L1-C1
P25-05L1-C1
P25- 2L1-C1
P25-15L1-C1

Refer to figures 5.3-1 through 5.3-9 for parts location.

TABLE 5.3-0

Major Amplifier Components

BOM NO.	REF. DESC.	PART NO.	DESCRIPTION
5.3-1	A6	540-071	15 Watt Output, 20 dB Gain Hybrid Power Amplifier
5.3-2	A1-A5	540-061	45 Watt, 900 MHz 14 VDC Common Base Amplifier
5.3-3		540-155	900 MHz 2-Way Power Splitter
5.3-4		540-155	900 MHz 2-Way Power Combiner
5.3-5		540-059	900 MHz 4-Way Power Splitter
5.3-6		540-087C	900 MHz 4-Way Power Combiner
5.3-7	A10	540-066	7 Pole Low Pass Filter, 960 MHz Cut Off
5.3-8	A12	540-083A	DC Distribution Board
		540-162	Power Meter Control Board
		540-174	Output Power Control Board

BOM 5.3-1

15 Watt Output, 20 dB Gain Hybrid Power Amplifier
Part No. 540-071

2-Watt Drive

PART NO.	DESCRIPTION	QUANTITY
240-071	P.C. Board	1
195-003	Hybrid Amplifier, MHW 820 Series	1
159-009	Attenuator, 10 dB, 2 Watt *	1
161-006	Capacitor, Ceramic Chip 1000pF	4
160-003	Capacitor, Multilayer 63 V, 0.1uF	3
164-007	Capacitor, Electrolytic 50 V, 2.2uF	3
157-003	Resistor, Chip 1/8 Watt, 10 Ohms	2
171-010	Coil, 7.5 Turns, 9/64 ID, 20 AWG	3
131-514	Connector, Molex 3 Pin Header	1

200 mW Drive

PART NO.	DESCRIPTION	QUANTITY
240-071	P.C. Board	1
195-003	Hybrid Amplifier, MHW 820 Series	1
161-006	Capacitor, Ceramic Chip, 1000pF	4
160-003	Capacitor, Multilayer 63 V, 0.1uF	3
164-007	Capacitor, Electrolytic 50 V, 2.2 uF	3
157-003	Resistor, Chip 1/8 Watt, 10 Ohms	2
171-010	Coil, 7.5 Turns, 9/64 ID, 20 AWG	3
131-514	Connector, Molex 3 Pin Header	1

NOTE: Refer to Figure 5-1 for location of parts.

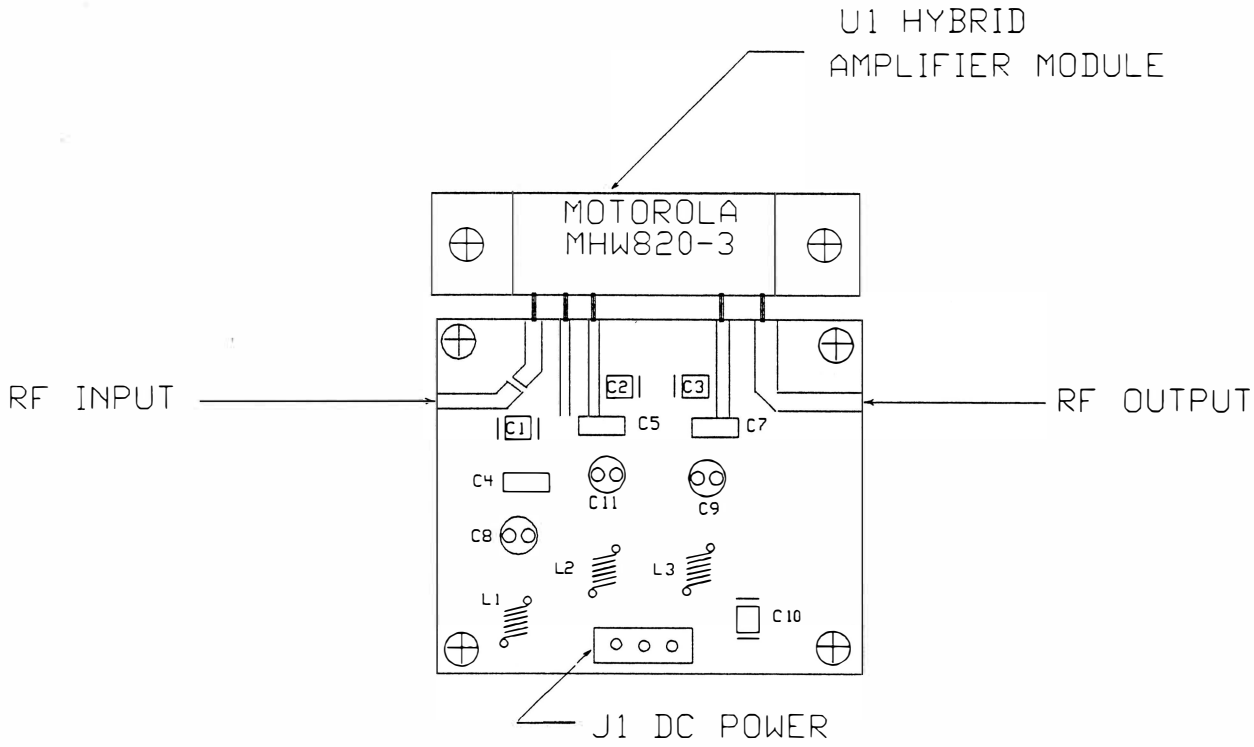

Fig. 5.3-1

PRINTED CIRCUIT BOARD LAYOUT 902-109
COMPONENT LOCATION AND FOIL PATTERNS
20 WATT 20 dB GAIN HYBRID POWER AMPLIFIER MODULE
MODULE ASSEMBLY NO: 540-071

MILCOM INTERNATIONAL Milcom 10891 CAPITAL AVE GARDEN GROVE, CA 92640	
SCHEMATIC DIAGRAM	
DESCRIPTION 20 W 20 dB GAIN HYBRID POWER AMPLIFIER MODULE	
USED ON	
MODULE ASSEMBLY NO	
CIRCUIT DESCRIPTION NO	
DRAWN BY LINH LE	DATE 01-11-93
PCB PN 540-071	REV B
TDS 950-133	REV A

BOM 5.3-2

45 Watt, 900 MHz, 14 VDC Common Base Amplifier
Part No. 540-061

PART NO.	DESCRIPTION	QUANTITY
162-008	Capacitor, Mini Metal Clad 100pF	1
162-009	Capacitor, Mini Metal Clad 150pF	1
162-003	Capacitor, Mini Metal Clad 10pF	2
162-012	Capacitor, Mini Metal Clad 12pF	2
142-001	Capacitor, Variable, 1.5-5pF	1
160-003	Capacitor, Multilayer CSF, 0.1uF	2
164-007	Capacitor, Electrolytic, 50V, 2.2uF	1
160-001	Capacitor, Ceramic, 500V, .001uF	1
161-005	Capacitor, Porcelain Chip, 56pF	1
161-006	Capacitor, Ceramic Chip, 1000pF	1
171-010	Coil, 20AWG 7.5 Turns 9/64 ID	1
131-514	Connector, Molex 3 Pin SGL Header	1
240-061	PCB, 800MHz,	1
203-002	Transistor, Power SD1414, 12 Volt	1
100-463	Heat Sink, KOL Wings	2

NOTE: Refer to figure 5-3 for location of parts

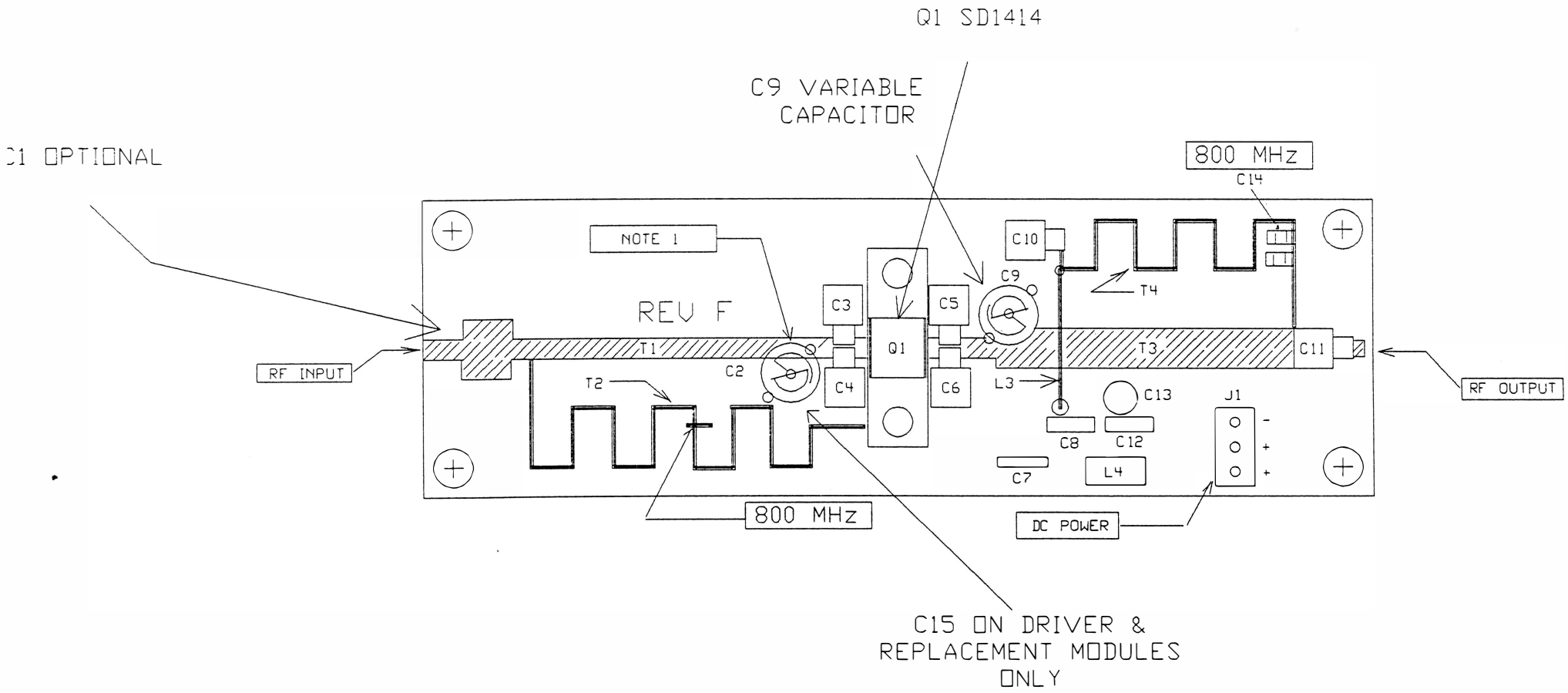

PRINTED CIRCUIT BOARD LAYOUT 902-097
COMPONENT LOCATIONS AND FOIL PATTERNS
45 WATT 806-960 MHz POWER AMPLIFIER MODULE
MODULE ASSEMBLY NO: 540-061 REV. F

Fig. 5.2

BOM 5.3-3

900 MHz, 2-Way Power Splitter
Part No. 540-155

PART NO.	DESCRIPTION	QUANTITY
240-155	P.C. Board	1
195-211	Sage, BHCTI 2.0" S-S, Cut 2.5"	1

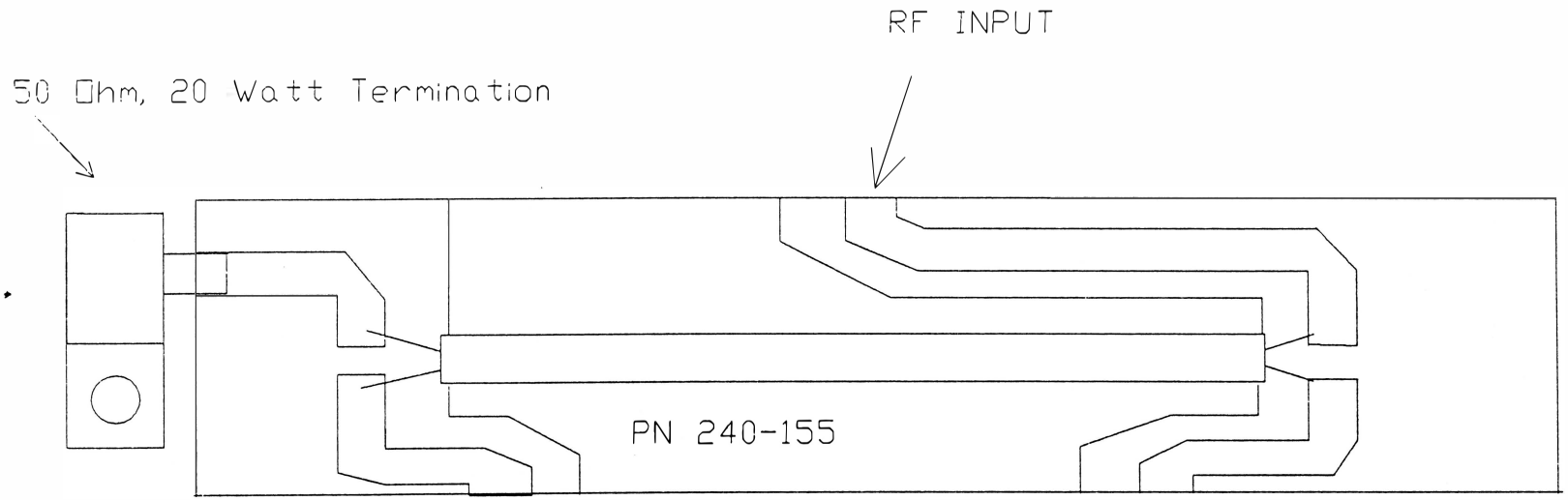

MILCOM INTERNATIONAL, INC

800/900 MHz 2-Way Splitter
Milcom International, Inc.

Fig. 5.4

BOM 5.3-4

900 MHz, 2-Way Power Combiner
Part No. 240-155

PART NO.	DESCRIPTION	QUANTITY
240-155	P.C. Board	1
195-211	Sage, BHCTI 2.0" S-S, Cut 2.5"	1

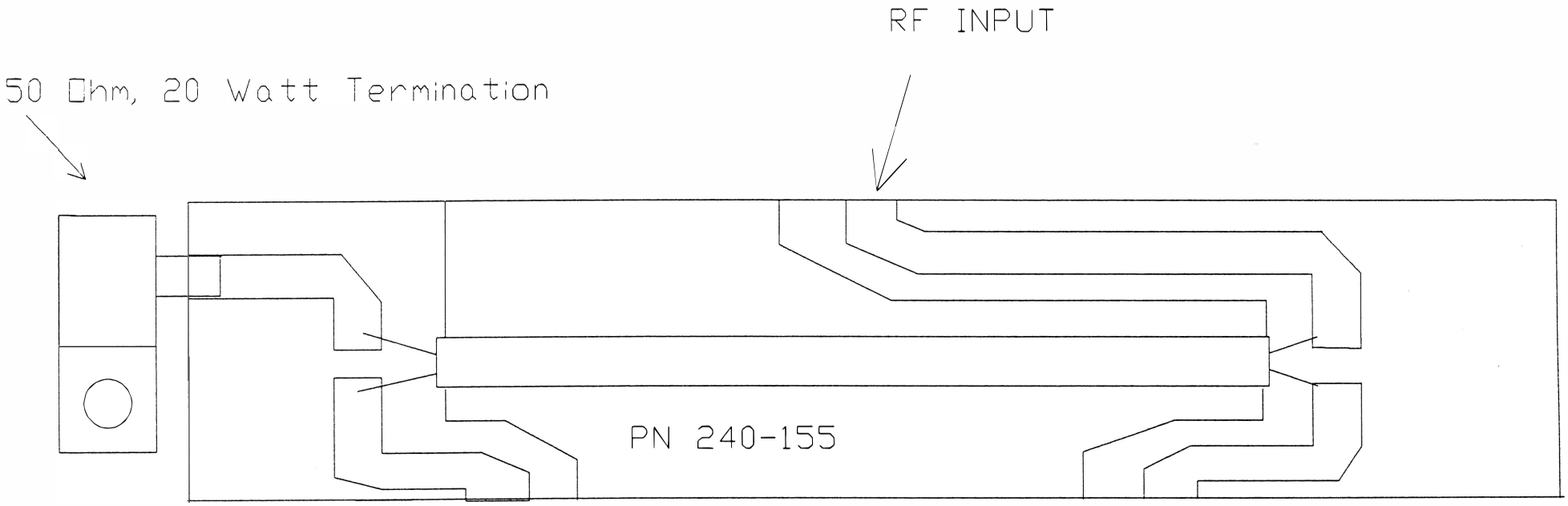

MILCOM INTERNATIONAL, INC

900 MHz 2-Way Combiner
Milcom International, Inc.

Fig. 5.5

BOM 5.3-5

900 MHz, 4 Way Power Splitter
Part No. 540-059

PART NO.	DESCRIPTION	QUANTITY
240-059	P.C. Board	1
195-211	Sage, BHCTI 2.0" S-S, Cut 2.5"	3
180-116	Diode, Rec. 08T-MBD701	1
170-008	Ferrite, Ind. 542-FB73-226	1
161-006	Capacitor, Chip Ceramic, 1000pF	1
160-004	Capacitor, Multilayer CSF	1

NOTE: Refer to Figure for location of parts.

MILCOM PART NO. 240-095 REV. F
4 WAY 800/900 MHZ QUAD SPLITTER

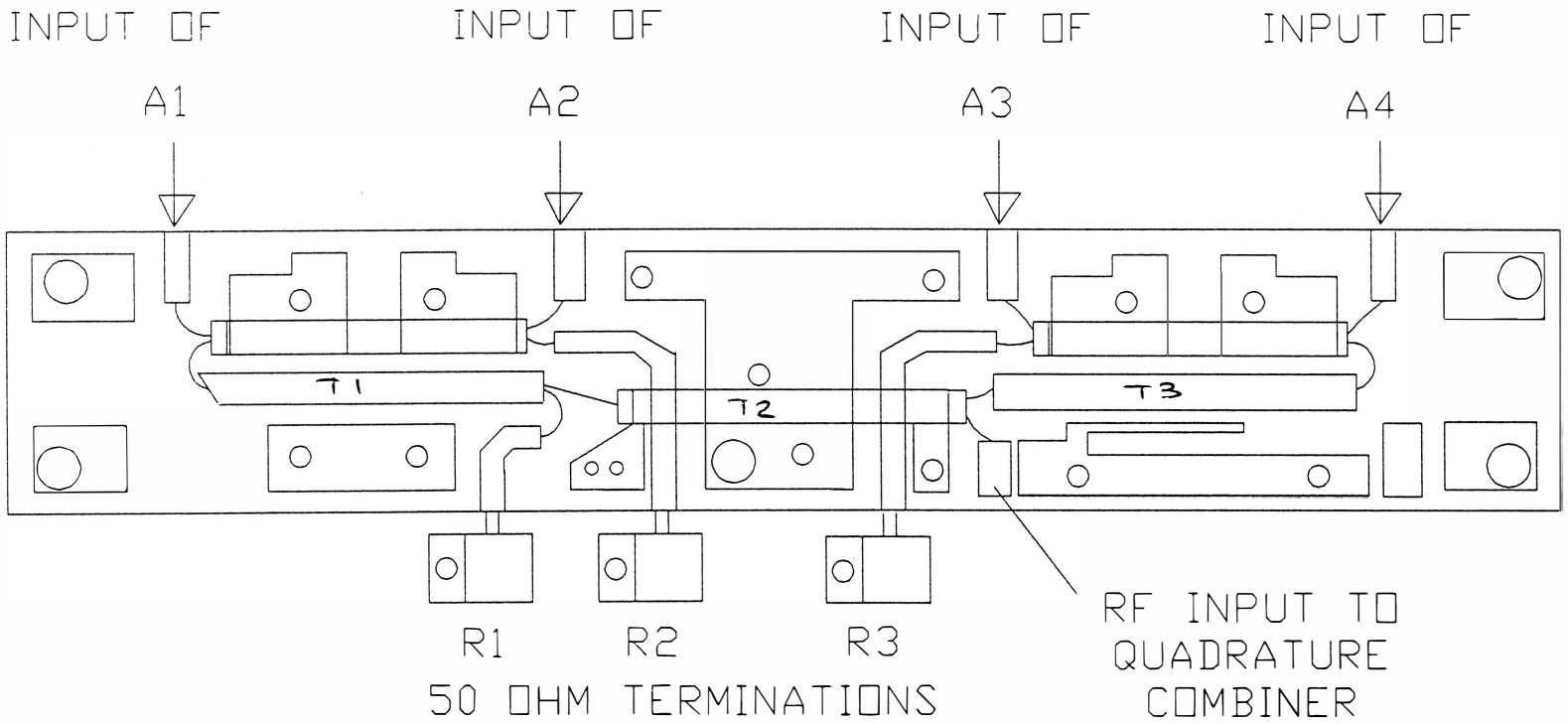

PRINTED CIRCUIT BOARD LAYOUT 902-090
COMPONET LOCATIONS AND FOIL TRACE PATTERNS
4 WAY QUADRATURE POWER SPLITTER 806-940 MHz
MODULE ASSEMBLY NO.: 540-059

Fig. 5.6

BOM 5.3-6

900 MHz, 4 Way Power Combiner
Part No. 540-087C

PART NO.	DESCRIPTION	QUANTITY
240-087C	P.C. Board	1
195-212	Sage, BJCTI 2.0" S-S, Cut 2.5"	3
142-001	Capacitor, Variable 1.5 to 5 pF	2

NOTE: Refer to Figure for location of parts.

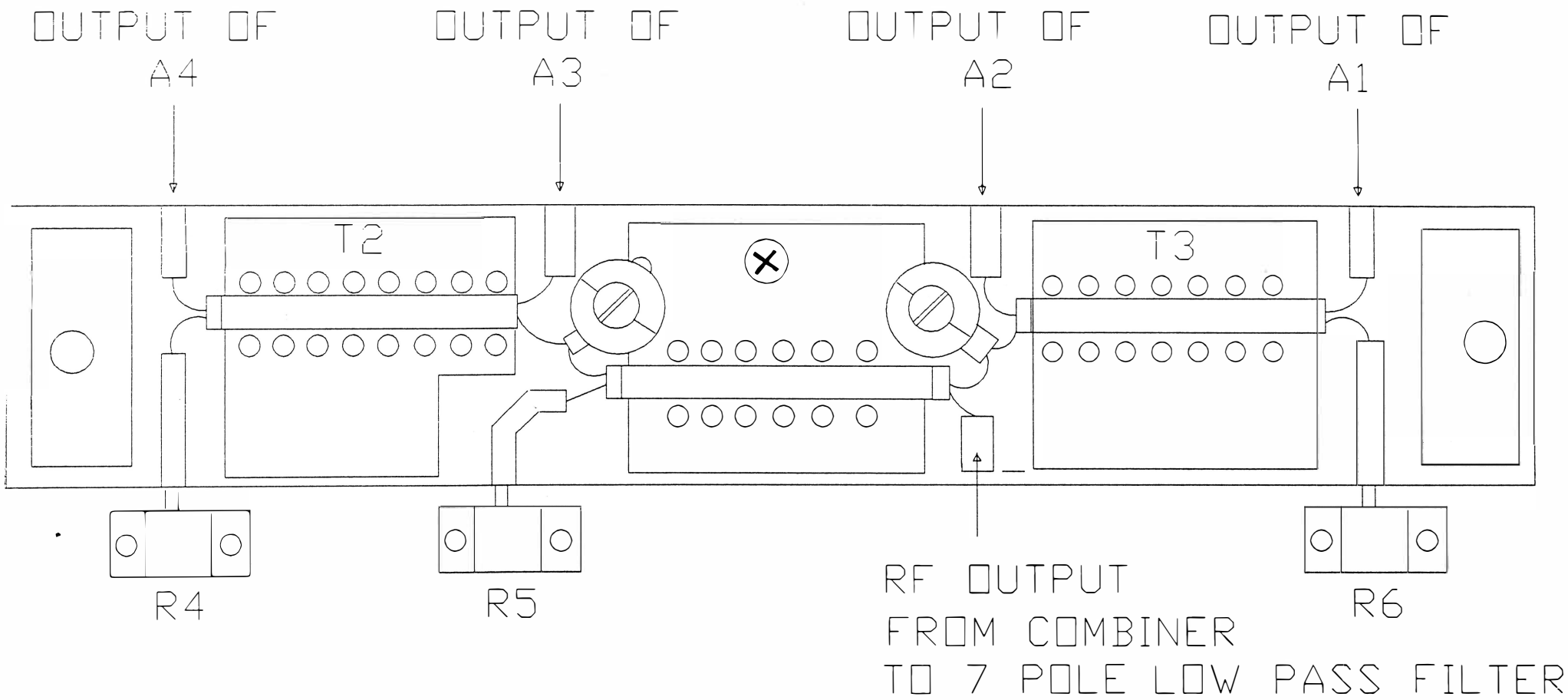

COMPONENT LOCATIONS AND FOIL PATTERNS
4 WAY QUADRATURE COMBINER 806-940 MHz
MODULE ASSEMBLY NO: 540-087C

Fig. 5.5

BOM 5.3-7

7 Pole Low Pass Filter, 960 MHz Cut Off
Part No. 540-066

PART NO.	DESCRIPTION	QUANTITY
240-066	P.C. Board	1
100-146	"U" Shaped Coil	3

NOTE: Refer to Figure for location of parts

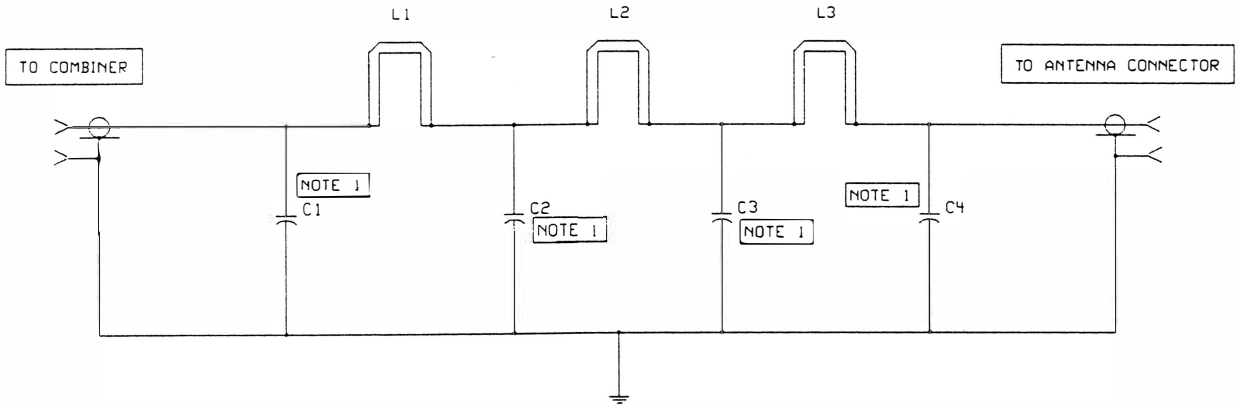

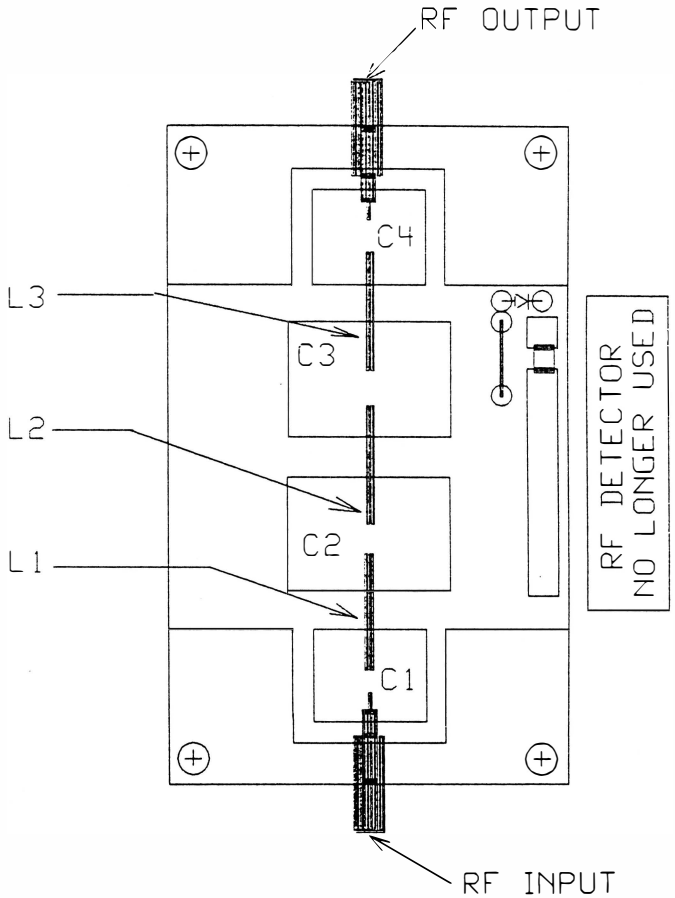

Fig. 5.6

NOTES

1 C1,C2,C3,C4 ARE PRINTED CIRCUIT BOARD CAPACITORS

PRODUCT	ASSEMBLY REFERENCE NO
P15-05L1	A12
P25-05L1	A12
P25-2L1	A12

MILCOM INTERNATIONAL

SCHEMATIC DIAGRAM 902-103

DESCRIPTION 7 POLE LOW PASS FILTER 890 MHZ C/O

USED ON ALL 806 TO 960 MHZ RF AMPLIFIERS

MODULE ASSEMBLY NO 540-066A

PRINTED CIRCUIT BOARD LAYOUT NO 902-104

BILL OF MATERIALS DWG NO 902-105

CIRCUIT DESCRIPTION NO TD 114 960LPFSC

BOM 5.3-8

DC DISTRIBUTION BOARD
PART NO. 540-083A

PART NO.	DESCRIPTION	QUANTITY
240-083	P.C. Board	1
151-122	Resistor, 1/4 Watt 1.2 Ohm	7
139-106	LED, and 123G Mini	7
180-002	Diode, Rec. MR751 P600A	4
136-107	Fuses, 20 Ampere	7
136-103	Fuses, Fuse Clip	14
115-015	Wire, #18 AWG (Red) Qty. Feet	1

NOTE: Refer to figure for location of parts

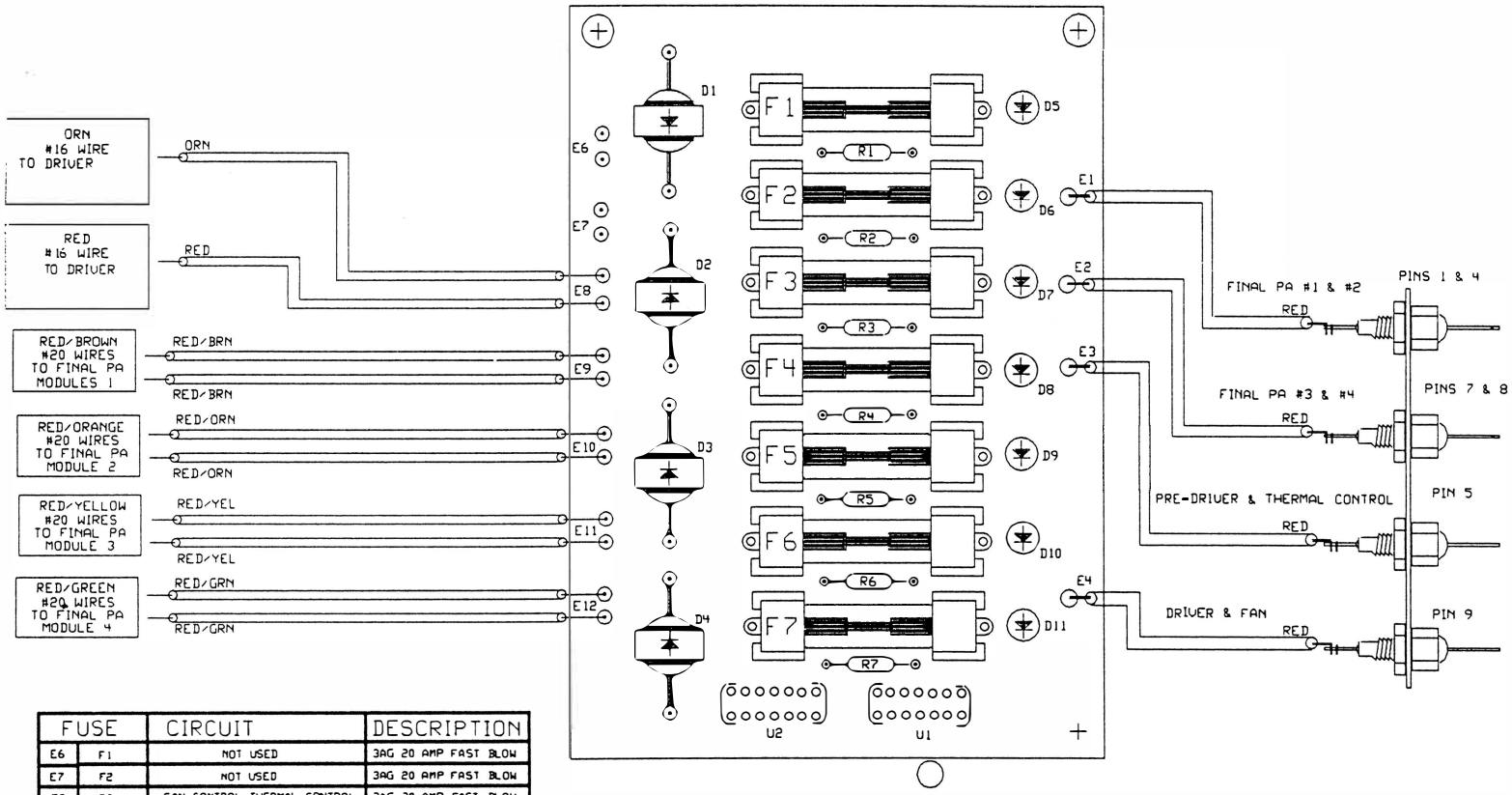

FUSE		CIRCUIT	DESCRIPTION
E6	F1	NOT USED	3AG 20 AMP FAST BLOW
E7	F2	NOT USED	3AG 20 AMP FAST BLOW
E8	F3	FAN CONTROL/THERMAL CONTROL	3AG 20 AMP FAST BLOW
E9	F4	FINAL PA #1	3AG 20 AMP FAST BLOW
E10	F5	FINAL PA #2	3AG 20 AMP FAST BLOW
E11	F6	FINAL PA #3	3AG 20 AMP FAST BLOW
E12	F7	FINAL PA #4	3AG 20 AMP FAST BLOW

DC POWER DISTRIBUTION AND FUSE BOARD
PICTORIAL & CONNECTIONS

MILCOM INTERNATIONAL Milcom 10891 CAPITAL AVE GARDEN GROVE, CA 92640	
SCHEMATIC DIAGRAM	
DESCRIPTION OUTLINE DRAWING - DC DISTRIBUTION BOARD	
USED ON 150 WATT, 900 MHz AMPLIFIER	
CIRCUIT DESCRIPTION NO N/A	
DRAWN BY L LE	DATE 01-13-93
PCB PN 240-083	REV E
TDS 950-129	REV: A

Fig. 5.7

BOM 5.3-9

Power Meter Control Board
Part No. 540-162

Part No.	Description	Quantity

NOTE: Refer to Figure for location of parts.

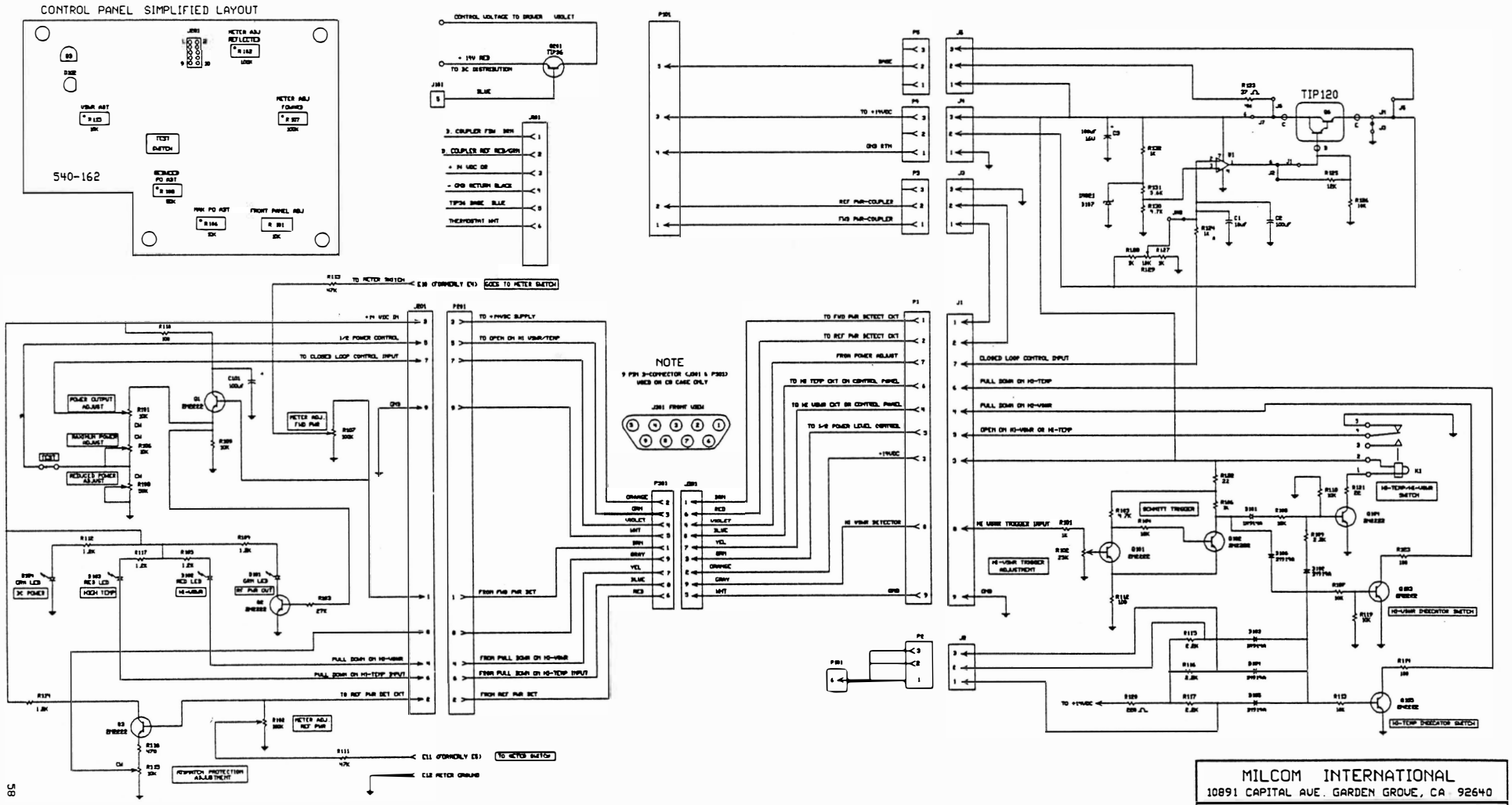

MILCOM INTERNATIONAL 10891 CAPITAL AVE. GARDEN GROVE, CA 92640	
CONTROL MODULE/CONTROL PANEL	
DESCRIPTION POWER/VSWR/HI-TEMP CONTROL SCHEMATIC/DC INTERCONN & SIMPLIFIED LAYOUT	
USED ON ALL KW SERIES AMPS WHICH HAVE PWR TEMP-VSWR CONTROL AND OR PWR MONITOR	
PCB PN 240-162 REV C AND 240-174 REV B	
DRAWN BY MAXWELL	DATE 6-14-91
TDS 950-077	REV A

BOM 5.3-10

Power Output Control Board
Part No. 540-174

220-01226-02-2A (12.800KHz)

D-Ran

PN-240-061 - Rev F.
800MHz. 45W - Power Amp. 12VDC.

ASSY 540-380 Rev.
4 way 800MHz Quad Combiner

Larg. φφ = 46,5 cm

PA - 28 cm

TDIT - 14 cm

66 --